A bearing ring or washer normally has a raceway groove where the rolling elements rotate and locate.

To assist in their precise location the outer ring (O.D.) and inner ring (bore) have similar surface finishes.

Rolling bearings depending upon type are able to accommodate radial or axial loads, many are capable of combined loads.

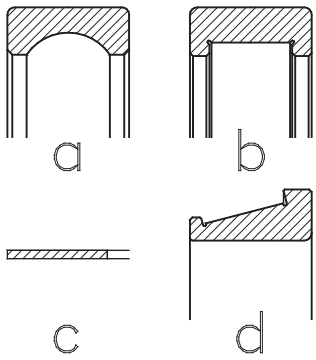

Fig. 1.4

Figure 1.4 shows some examples of different bearing rings.

1.4a) Outer ring single row deep groove ball bearing
1.4b) Outer ring single row cylindrical roller bearing
1.4c) Flat thrust washer of a needle roller thrust bearing
1.4d) Inner ring single row tapered roller bearing

Types of Rolling Elements

Rolling elements are simple geometrical bodies i.e. balls, rollers or bearing needles, which transmit the applied forces.

The principle distinction between rolling element bearings and their initial bearing description is generally classified solely due to the rolling element shape (e.g. ball bearing, roller bearing, needle roller bearing, etc.)

The difference between ball and roller bearings is also considered in the calculation formula for rolling bearings. This is due to the differences in geometric surface contact behaviour.

a) A ball lying on a flat surface makes contact at a single point. This is termed "**point contact**" (fig 1.5).

   In practice a ball under load will have elastic deformation. The curved shape of ball bearing raceway changes this contact shape to become ellipsoidal.

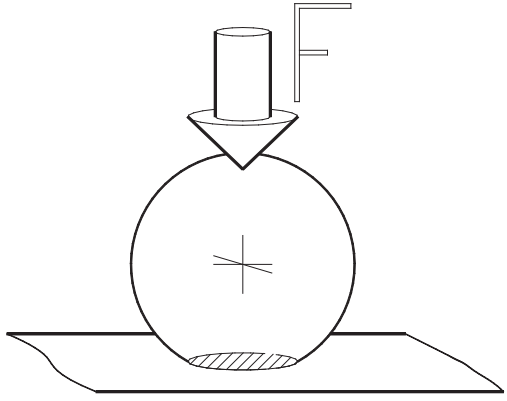

Fig. 1.5

Due to this usually very small contacting area ball bearings have less frictional resistance and are more suitable in high speed applications.

These small contact areas result in higher specific pressure at given loads when compared to roller bearings of equal size (i.e. less load carrying capability).

b) A roller lying on a flat surface makes contact in a line. This is termed "**line contact**" (fig 1.6).

When a load is applied the line contact changes basically to a rectangle for cylindrical surfaces and trapezoidal for conical surfaces.

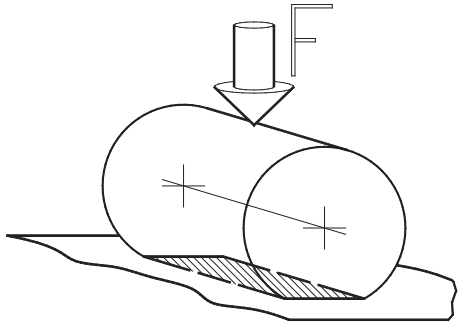

Fig. 1.6

Under a given load the contacting areas for line contact is larger than that of point contact. Thus rolling bearings have higher load ratings than ball bearings, although they also have higher friction.

The length of this contacting area makes roller bearings more sensitive to misalignment between rollers and raceways. Misalignment causes undesired stress at the roller ends. Such stress peaks may cause a local overloading of the bearing steel. To eliminate these stress concentrations, termed "edge loading", it is usual to profile rollers and raceways.

As stated earlier, there are calculation formula differences for ball and roller bearings, e.g. when calculating the nominal bearing life rating according to the standardised method the different geometric surface contact behaviour is considered by different life exponents.

The life exponent **p** in the standardised equation is for

ball bearings:	**p = 3**
roller bearings:	**p = 10/3 (3.333333)**

Roller Shapes

Rollers used in rolling bearings are of different shape. The most important base shapes are shown in fig. 1.7:

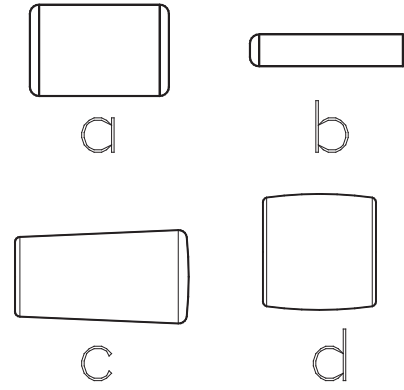

Fig. 1.7

1.7a) **Cylindrical roller**
Mainly produced with a profiled shape of roller diameter to avoid excessive edge stresses.

1.7b) **Needle roller**
Needle rollers are basically cylindrical rollers with a large ratio of length to diameter.

1.7c) **Tapered roller**
Formed as a conical shaped solid element and profiled shape of diameter.

1.7d) **Barrel roller**
Barrel shaped rollers are produced either symmetric or asymmetric in design (i.e. as used in self-aligning spherical roller bearings).

Cage

A cage fulfils several functions within a rolling bearing:

- to separate the individual rolling elements.
- to guide and position the rolling elements between the raceways.
- to retain the rolling elements.

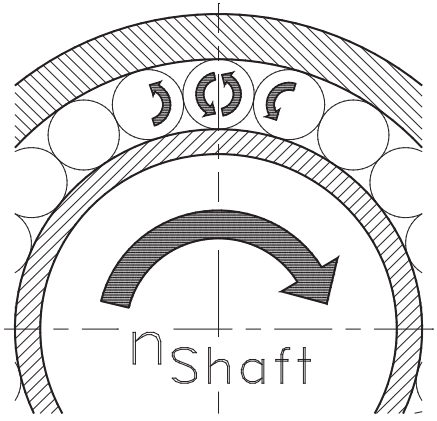

Fig. 1.8

Under certain conditions a cage may be omitted from the assembled bearing type. This is termed **full complement** bearing.

This enables a maximum load carrying capacity by utilising the bearing cross sectional area with the optimum number of rollers.

This causes higher friction therefore lower speed capabilities.

It can be seen (fig 1.8) that each rolling element contacts the other in a contrarotating motion, thereby, generating higher bearing friction and thus having lower speed capabilities.

For rolling bearings fitted with cages, however, minimal sliding friction occurs between the respective surfaces of rolling elements and cage pockets (fig 1.9).

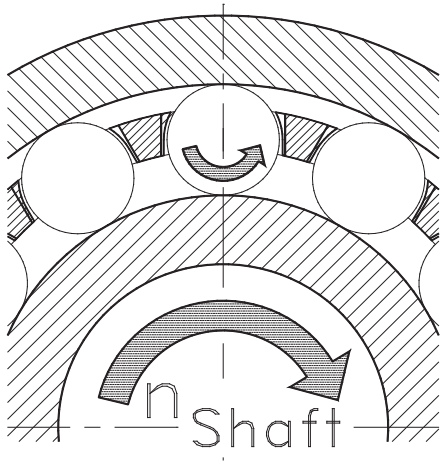

Fig. 1.9

Rolling bearing cages are manufactured from the following materials;

- pressed mild steel sheet,
- pressed brass or bronze sheet,
- brass or bronze,
- plastics (e.g. polyamide or nylon),
- light metal alloys,
- steel,
- resin,
- sintered metals,
- special materials.

Additional Parts and Accessories

Several bearing types are manufactured with integrated shields or seals.

There is a wide variety of designs and materials used for seals and shields when fitted to rolling bearings. Additionally, rolling bearing seals are manufactured in materials suitable for high temperature applications.

Some bearing types, mainly deep groove ball bearings, are manufactured with snap ring grooves on their outer diameter. This feature enables simple axial location at mounting when used in conjunction with a snap ring. These bearings can be fitted with or without a snap ring (see fig 1.10).

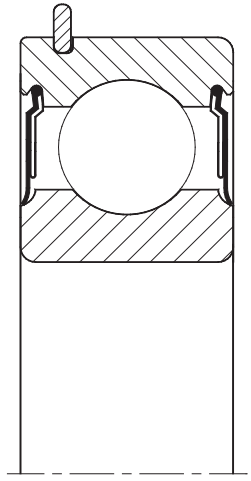

Fig. 1.10

Other bearing types similarly have loose, yet matching parts (e.g. cylindrical roller bearing – separate thrust collar or side plates). (fig 1.11)

Many of these parts are individually available.

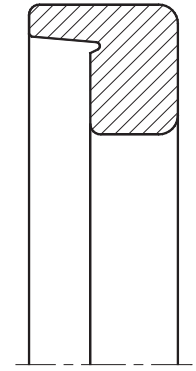

Fig. 1.11

Accessories are usually integral parts to a rolling bearing assembly. Examples are adapter sleeves, withdrawal sleeves, lock nuts (see fig. 1.12), locking devices and rolling elements etc.

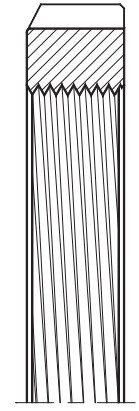

Fig. 1.12

Some of these accessories are used for different purposes, not only in connection with bearings. Separate balls, for example, are often used in vents or even for calibrating gauges.

Lock nuts are also frequently used for locking of other machine components like couplings, gears or disks.

Classification of Rolling Bearings

Design engineers may select the most suitable bearing for their purposes from a large number of different bearing types and designs. In making a selection it is necessary to have some knowledge of the different bearing types and their specific behaviours.

The selection of rolling element bearings is based on the following general criteria:

a) Based on the direction of applied load (i.e. rolling element shape)

- **Deep groove ball bearings**
- **Angular contact ball bearings**
- **Cylindrical roller bearings**
- **Tapered roller bearings**
- **Spherical roller bearings**
- **Needle roller bearings**

b) Based on their load capacity and capability (i.e. radial, angular contact, axial or thrust forces)

- **Radial deep groove ball bearings**
- **Angular contact thrust ball bearings**
- **Cylindrical roller thrust bearings**
- **Radial tapered roller bearings**
- **Spherical roller thrust bearings**

c) Based on availability and suitability whether standard bearings or bearings for special application requirements.

NKE will design, develop and produce special bearings and associated products to individual customer application requirements with specific reference to **reliability, performance** and **service** operations.

- **Clutch release bearings**
- **Traction motor bearings for railway vehicles**
- **Track runner bearings and support rollers**
- **Stainless steel bearings**
- **Ball and roller bearing for high-temperature applications**
- **High precision bearings for machine tool spindles**
- **Roll neck bearings for steel rolling mills**
- **Profiled rollers**
- **Shaker screen bearings**
- **Electric insulated bearings**

d) Based on application and unit design assembly.

d 1) **Separable** bearings:

Where one or more bearing components may be mounted or dismounted easily within an application assembly procedure, e.g. taper roller, cylindrical roller, needle roller bearings, thrust ball bearings and split bearings.

d 2) **Non-separable** bearings:

Where each bearing is mounted and dismounted as a complete unit, e.g. deep groove ball, angular contact bearings and spherical roller bearings.

Overview of the More Popular Bearing Types and their Characteristics

Radial Deep Groove Ball Bearing

Single row deep groove ball bearings (fig. 2.1) are the most commonly used rolling bearings.

The balls run in deep grooves in both the outer and inner rings. This enables the bearing type to accommodate radial loads as well and some axial loads in either direction.

Deep groove ball bearings are especially suitable for high speed applications due to their low friction. They achieve the highest speed ratings of all rolling bearing types. Deep groove ball bearings are available in a wide variety of designs with different shields and seals. This enables greased “for life” bearings, maintenance free and more efficient designs.

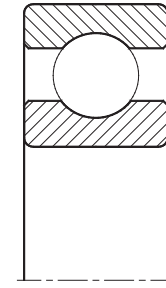

Fig. 2.1

Other classifications of single row deep grooved ball bearing are **miniature bearings** – up to and including 3.175 mm inner bore diameter

Extra small bearings – over 3.175 mm up to and including 9.525 mm inner bore diameter

Max type bearings – greater number of balls than normal allowing higher radial loads, with limited axial loads in one direction.

For more information see page **371.**

Angular Contact Ball Bearings

Single row angular contact ball bearings (fig. 2.2) support axial loads applied at a certain contact angle to their axis in one direction only. These bearing types are not separable; therefore, they are mounted in bearing pairs or a combination of bearing sets.

This bearing is suitable for high and very high speeds, commonly used in machine tool spindle applications.

For more information see page **440**.

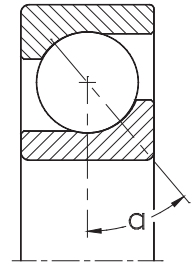

Fig. 2.2

Single row angular contact ball bearings for universal matching are specially manufactured for applications, where two individual bearings are mounted side by side in random order, e.g. in back-to-back arrangement (fig. 2.3).

The rings are machined to ensure that specific clearances or preload values are attained within a mounting arrangement. Individual bearings can be arranged in either back-to-back, face-to-face or tandem mounting arrangement and demonstrate excellent ability to absorb radial and axial loads.

For more information see page **462**.

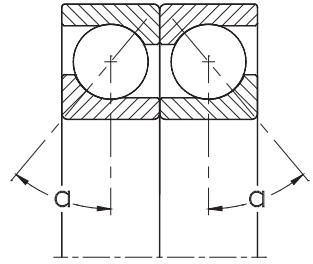

Fig. 2.3

Double row angular contact ball bearings (fig. 2.4) are similar in their internal design to two single row angular contact bearings mounted in a back-to-back arrangement.

Double row angular contact ball bearings have less overall width than two single row ball bearings. They can accommodate heavy radial loads and axial loads in either direction additionally, providing a very rigid bearing arrangement.

Designs with polyamide cage are without filling slots. This execution can operate at temperature up to +120°C. Bearings fitted with pressed steel or brass cages have ball filling slots on one side face, therefore, are less suited to accommodate equal axial loadings. These bearing types are sensitive to misalignment.

For more information see page **470**.

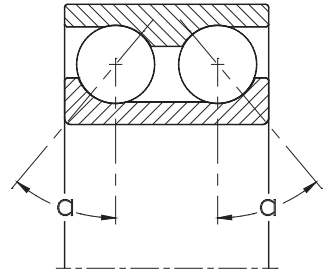

Fig. 2.4

Four-Point Contact Ball Bearings

Four-point contact ball bearings (fig. 2.5) are basically single row angular contact ball bearings with split inner ring (i.e. two half inners). This bearing is separable.

The contact geometry between rolling element and raceway is “four-point” contact, due solely to raceway form design (i.e. Gothic arch) this enables the support of equal axial loads in either direction.

Where necessary there are locating grooves in the outer rings to prevent undesirable rotation.

For more information see page **484**.

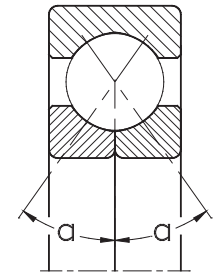

Fig. 2.5

Self Aligning Ball Bearings

Self aligning ball bearings (fig. 2.6) are double row ball bearings, each set of balls rotate within a single outer ring spherical raceway. This gives the bearing a self aligning feature to overcome misalignments, shaft deflections and housing variations.

Self aligning ball bearings are non-separable. They are suitable for medium radial loads and low axial forces.

Engineers should be aware and consider in their application designs that some self aligning ball bearing units have balls that protrude beyond the bearing faces.

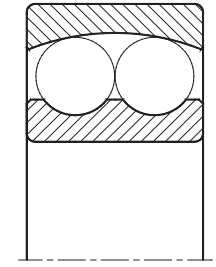
Fig. 2.6

Self aligning ball bearings are frequently used with a 1:12 tapered bore (fig. 2.7) for mounting using adapter sleeves.

This feature enables direct mounting onto shafts for applications where high running accuracy is unnecessary.

Other design variants include the use of extended inner rings; these rings have slots on one side face to which dowel pin location via the shaft is permitted. The inner ring bore diameter variation for these types is to tolerance class J7.

Some self aligning ball bearings are available fitted with rubber seals on both sides (i.e. sealed “for-life”).

For more information see page **496**.

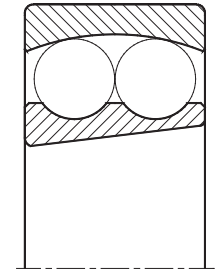
Fig. 2.7

Cylindrical Roller Bearings

Single row cylindrical roller bearings are used in the transmission of high radial forces. Depending on their rib design arrangement single row cylindrical roller bearings also have the following features:

N and NU, (fig. 2.8), may be used as a floating bearing.

NJ and NF types also support axial loads in one direction only.

NH (i.e. NJ+HJ) and NUP provide axial location and support axial loads in either direction.

Most cylindrical roller bearings are separable, therefore, provide simple mounting and dismounting. These types are suitable for high speed applications.

For more information see page **535**.

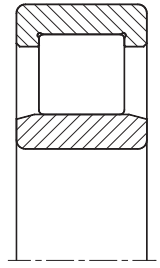

Fig. 2.8

Full complement cylindrical roller bearings (fig. 2.9) are cageless bearings designed to accommodate maximum radial load capacity.

Under service conditions the roller elements contact each other in a contra rotating motion resulting in considerably higher friction when compared to caged bearing types. This additional friction results in a lower speed rating.

Standard full complement cylindrical roller bearings are manufactured in either single row or in double row designs.

Bearing type **NNF 50... -2LS-V** has seals fitted.

For more information see page **598**.

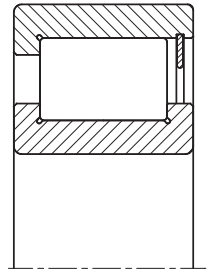

Fig. 2.9

Spherical Roller Bearings

Spherical roller bearings are two rows of barrel-shaped rollers running in a single spherically formed outer ring (fig. 2.10).

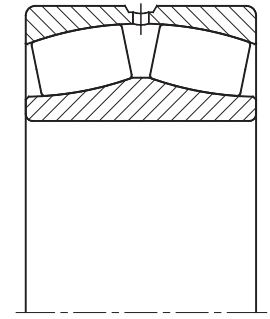

Fig. 2.10

This allows the self aligning bearing feature thereby accommodating the manufacturing and assembly misalignments of shaft to housing, including shaft bending and deflections.

Spherical roller bearings are non-separable and can accommodate very high radial loads and certain axial loads in either direction.

Due to their kinematic characteristics spherical roller bearings are not suitable for very high speeds.

Typical applications for spherical roller bearings are mining and heavy industries.

The majority of spherical roller bearings are produced with a circumferential groove and lubrication holes in the outer ring this allows relubricating the bearings.

Spherical roller bearings are less frequently used with **tapered bore** (fig. 2.11) mounted directly onto a tapered shaft.

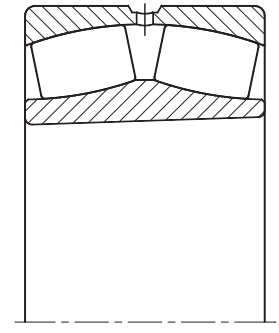

Fig. 2.11

Generally, mounting of these bearing types is in conjunction with either adapter or withdrawal sleeves. The most common tapered bore is 1:12, namely designation **suffix K**. Other spherical roller bearings with a small radial cross section (i.e. series **240** and **241**) have slower tapers 1:30, namely designation **suffix K30**.

Large spherical roller bearings are often mounted and dismounted using hydraulic nuts in conjunction with the standard adapter and withdrawal sleeves, or alternatively, using the oil injection method with modified adapter and withdrawal sleeves.

Spherical roller bearings for vibrating screen applications (suffix **SQ34**) have differing design features, namely machined solid brass cages, closer geometric tolerances and radial clearances when compared to standard bearings.

For more information see page **707**.

Tapered Roller Bearings

Tapered roller bearings (fig. 2.12) are normally separable radial bearings. They comprise of a cone assembly (i.e. inner ring, with cage and roller assembly) and separable “cup” (i.e. outer ring). Due to the contact angle each radial load applied on a tapered roller bearing generates an internal thrust force. Since single row tapered roller bearings accommodate thrust loads in one direction only they have to be arranged against a second taper roller bearing to accommodate thrust loading in the opposite direction. Tapered roller bearings support high radial and thrust forces even at high speeds.

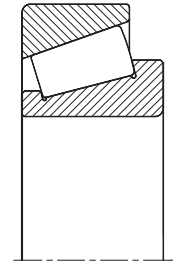

Fig. 2.12

They do not permit large misalignment.

For more information see page **649**.

Paired single row tapered roller bearings are two single row tapered roller bearings paired using spacers and distance pieces for defined axial clearance or preload.

These bearing are supplied back-to-back, face-to-face or tandem arrangements according to customer requirements.

The pairing of bearings is completed during the manufacturing stages, therefore, mounting time and cost is reduced.

Several types of paired single row tapered roller bearings are available in face-to-face arrangement as standard bearings, identified by suffix **DF** (fig. 2.13).

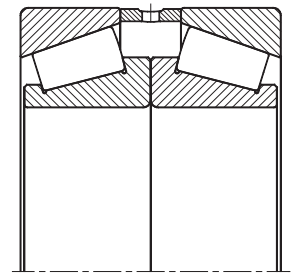

Fig. 2.13

Other sizes and /or designs are available on request.

Double row tapered roller bearings (fig. 2.14) are ready-for-use **units**. Depending on the application they are arranged either in face-to-face or back-to-back arrangement.

They consist of an inner ring with two roller rows and a one-piece or multiple-part outer ring.

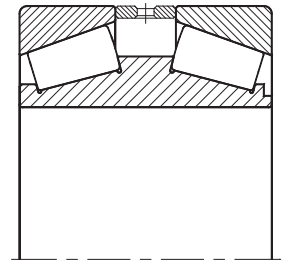

Fig. 2.14

Such units are used in machine tool spindles and as axle box bearings of railroad vehicles.

Double row tapered roller bearings belong to the supplementary range and are available on request.

Four row tapered roller bearings (fig. 2.15) also belong to the supplementary product range.

They are ready for use **bearing units** for rolling stands in steel mills. Due to the many different sizes and designs such bearing units are manufactured to customer order only.

For more information on **NKE multi-row tapered roller bearings** please contact NKE.

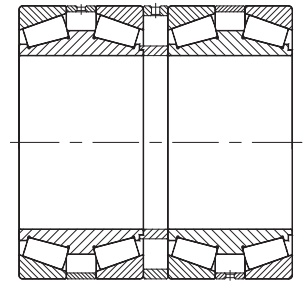

Fig. 2.15

Thrust Ball Bearings

Thrust ball bearings are available as single direction and double direction designs. They are separable and thus easy to mount. Thrust ball bearings can support axial loads only.

They are unsuitable for high speed use.

These bearing types do not permit any misalignments. However, to overcome this problem, design variations incorporating spherical housing washers and seating rings are available.

To ensure optimum function, thrust ball bearings require a specific minimum load.

Single direction thrust ball bearings (fig. 2.16) consist of a shaft (i.e. small bore) and housing washer (i.e. large bore) each having a face raceway groove. These washers are separated by a cage and ball assembly.

This design will take thrust loads in one direction only.

Double direction thrust ball bearings (fig. 2.17) are suitable for accommodating axial forces in both directions. They consist of two shaft washers, a central housing washer located in the middle of the assembly separated by two ball and cage assemblies. These bearings do not permit any misalignment.

However they are also available with spheroid housing washers for applications where some misalignment may occur.

For more information see page **798**.

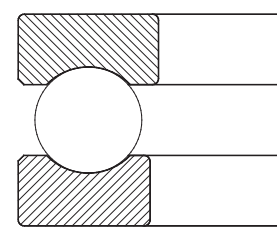

Fig. 2.16

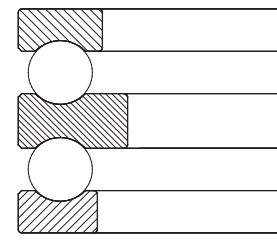

Fig. 2.17

Cylindrical Roller Thrust Bearings

Cylindrical rollers thrust bearings (fig. 2.18) are of very simple design consisting of a shaft washer, housing washer, cage and roller assembly. Cylindrical roller thrust bearings are capable of supporting higher loads compared to thrust ball bearings, therefore, are suitable for applications where very high thrust load carrying capability is required. These bearing types are insensitive to shock loading, unsuitable for radial loading and do not permit any misalignment.

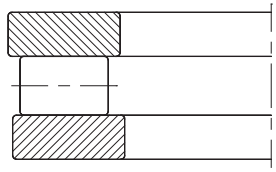

Fig. 2.18

Double direction acting cylindrical roller thrust bearings (fig. 2.19) may be built using components of single direction acting cylindrical roller thrust bearings together with **intermediate washers ZS**.

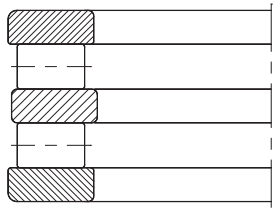

Fig. 2.19

Such intermediate washers belong to the NKE supplementary product range. Details are available upon request.

For more information see page **841**.

Spherical Roller Thrust Bearings

Additional to the thrust bearings previously mentioned **spherical roller thrust bearings** (fig. 2.20) are self aligning bearings that are separable and thus easy to mount.

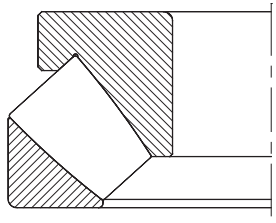

Fig. 2.20

Spherical roller thrust bearings are single direction acting and can accommodate high thrust loads as well as a certain amount of radial loads.

For an optimum function spherical roller thrust bearings need a certain minimum load. These bearings are used in applications where high capability in taking thrust loads and misalignments is necessary.

For more information see page **857**.

Cam Rollers

Cam rollers are ball bearings with a very thick-walled outer ring that runs directly onto a guiding surface or a track.

Due to this thick-walled outer ring they are capable to run even under shock loads.

Because of the fact that cam rollers are usually used under very rough operating conditions they are supplied with incorporated seals or shields.

To avoid excessive edge stresses when running on tracks or to compensate for misalignments the cam rollers are frequently used with crowned outer diameter (suffix **R**).

Single row cam rollers are similar to sealed single row deep groove ball bearings. They are usually used with two seals, but on request they are also available with shields.

Single row cam rollers are frequently used with crowned outer diameter (fig. 2.21).

Double row cam rollers (fig. 2.22) are based on double row angular contact ball bearings of series **32**... and **33**... .

They feature polyamide cages and shields; these rollers are also often used with a crowned outer diameter.

To guarantee a long service life even under tough operating conditions these rollers have a lubrication hole on their inner rings.

For more information see page **875.**

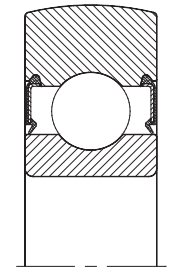

Fig. 2.21

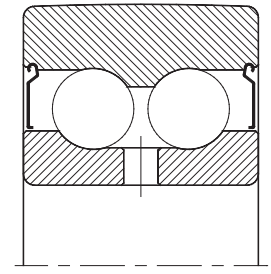

Fig. 2.22

Accessories

The term “accessories” used by NKE is applicable to separable products as used in specific bearing assemblies.

Examples:

a) Separate cylindrical roller bearing thrust collars
b) Separate needle roller bearing inner rings
c) Adapter sleeves, washers and locking nuts (fig. 2.23)
d) Withdrawal sleeves (fig. 2.24)

Other examples for bearing accessories are snap rings, sealing washers, spacers, etc.

For more information see page **968**.

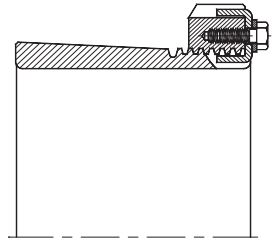

Fig. 2.23

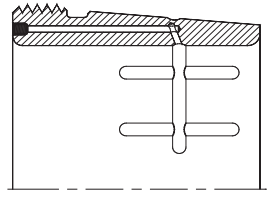

Fig. 2.24

General

The **designations** of rolling element bearings consist of combinations of letters and numbers. Although the designation system has been built up following a logical principle the classification of individual bearing types may sometimes be hard to understand for the layman.

The designation code of rolling element bearings has been built up in such a way that different parts of the designation exactly identify the bearings type, size and specific characteristics.

Besides the classification system of standard bearings, there are a large number of individual special bearing designations for “special” bearings or standard bearings that feature some special characteristics. Such special designation may differ according to manufacturer standards.

The basis of the rolling element bearing designation system is DIN-standard **DIN 623**.

ISO Standards

Basic bearing design, their boundary dimensions and the tolerances of **standard bearings** are defined by internationally recognised standard plans (e.g. **ISO 15**, **ISO 355** and **ISO 104** reps. in **DIN 616** and **DIN ISO 355**.) Boundary dimensions as defined by the standard plans include bearing cross sections and their boundary dimensions according to mathematical rules.

In these standard plans for each **bore diameter** several different possible **outer diameters** and **widths** or, in the case of thrust bearings, **heights** have been assigned.

In this way **diameter series** and **width series** for standard bearings have been defined.

Some examples for the structure of standard plans are shown in fig. 3.1.

Defined in these standards are bearing base design, **bore diameter (d), outer diameter (D), width (B)**, or, in the case of thrust bearings, **height (H, T)** and minimum values for chamfer **dimensions (r)** (fig.3.2).

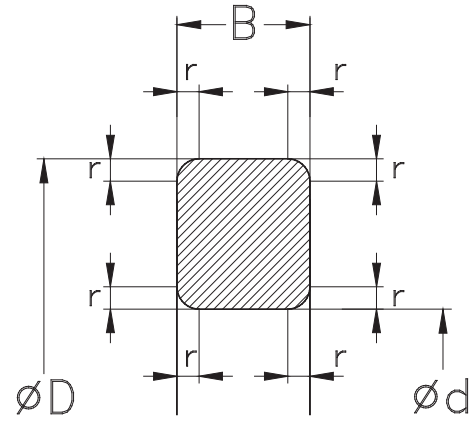

Fig.3.2

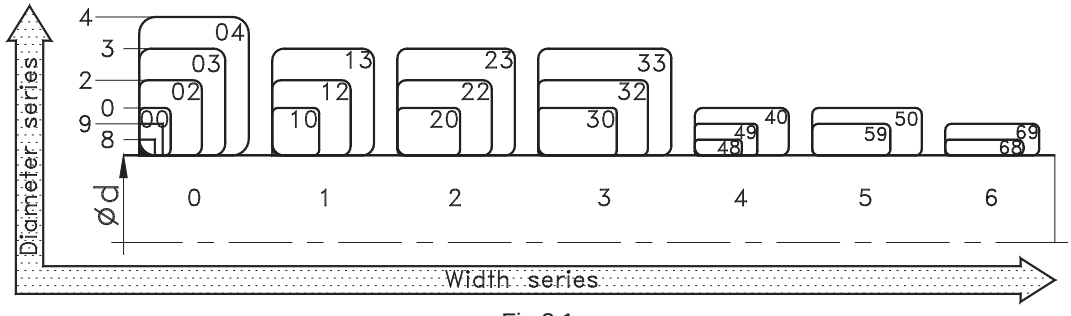

Fig.3.1

Designation System of Standard Bearings

The general classification system of standard bearing bases includes the **diameter series** and **width series**.

The standard classification system includes:

- **prefixes**
- a **base designation**
- **suffixes**

(see fig.3.3)

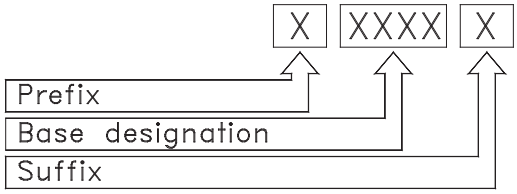

Fig.3.3

For metric tapered roller bearings the “traditional” designation system according to DIN 720 has a new “parallel” designation system now established according to **DIN ISO 355**.

Fig. 3.4 shows in principle the structure of the designation system for standard bearings.

In the following more important symbols are explained.

Prefixes

Prefixes usually identify **separate parts** of bearings, special bearings or in the case of stainless steel bearings the different bearing material.

Examples for bearing parts:

Separable bearing types, (e.g. cylindrical roller bearings or needle roller bearings), sometimes are used without specific components.

In these cases the used components are identified by the following prefixes:

L…… separate ring
e.g. LNU314-E
Inner ring of cylindrical roller bearing NU314-E

IR…… ring
e.g. **IR40X50X20**
Separate inner ring of a needle roller bearing

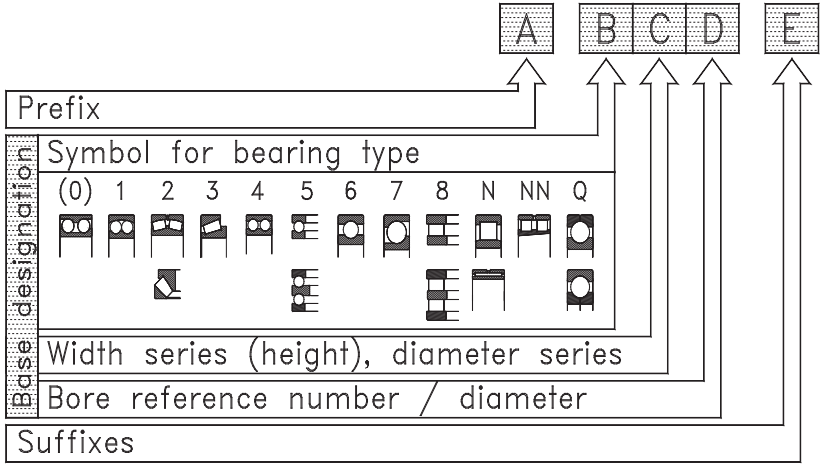

Fig. 3.4

Examples for bearing parts:

R…… ring with roller set
e.g. **R**NU314-E
Outer ring with roller set of a cylindrical roller bearing NU314-E

e.g. RNA6912
Outer ring with needle roller assembly of a needle roller bearing NA6912

BO…… loose rib
e.g. **BO-**NUP220-E
Loose rib of a cylindrical roller bearing NUP220-E

AXK… Needle roller and cage thrust assembly
e.g. **AXK**5578

GS…… housing washer
e.g. GS-81111
Housing washer of a cylindrical roller thrust bearing 81111

WS…… shaft washer
e.g. WS-81111
Shaft washer of a cylindrical roller thrust bearing 81111

Base Designations

The **base designation** describes bearing type, base design and its size.

Standard bearings usually have base designations that consist of letters and numbers or a combination of both. They indicate:

- type and base design (**bearing series**)
- size (**bearing bore diameter**)

Fig.3.5 shows a schematic representation of the structure of base designation of standard bearings.

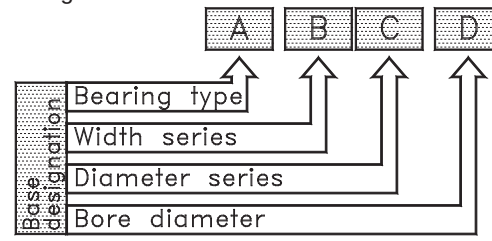

Fig. 3.5

Bearing Series

The symbol of the bearing series contains information about the **type of bearing** and its assignment to a certain **width** or **diameter series** or, in the case of thrust bearings, to a certain **height** and **diameter series**.

The individual bearing series is identified by letters or numbers, or a combination of both.

Bearing Types

The identification of the **bearing type** is made by the first symbols of the base designation.

The different bearing types may be distinguished by letters or numbers or a combination of both.

In some cases it has been established to omit the first numbers of the identification symbol of the Bearing type, particularly the first figure of the dimension series.

The most common **bearing series** are:

(0) Double Row Angular Contact Ball Bearings

For practical use the "**0**" is omitted.

Common series: (0)**32**
(0)**33**

1 Self Aligning Ball Bearings

The "**1**" is omitted in some cases. Common series:

122	**1**(0)**3**	**1**(1)**0**
104	**1**(0)**2**	
(1)**23**	(1)**22**	

2 Spherical Roller Bearing

Standard series:

Radial spherical roller bearings:

223	**231**	**238**
213	**240**	**248**
232	**241**	**239**
222	**230**	**249**

Spherical roller thrust bearings

292
293
294

3 Tapered Roller Bearings

Standard series:

302	**303**	**313**
320	**322**	**323**
330	**331**	**332**
329		

4 Double Row Deep Groove Ball Bearings

The "**2**" in the designation of width series is omitted for practical use:

Series: **4**(2)**2**
4(2)**3**

5 Thrust Ball Bearings

The most commonly used series:

510	**511**	
512	**513**	**514**
522	**523**	**524**
532	**533**	**534**
542	**543**	**544**

6 Single Row Deep Groove Ball Bearings

In most cases the "**0**" and the "**1**" from the symbol of width series is omitted for practical use.

The most important series are:

618	**619**	
(60)**2**	(60)**3**	
622	**623**	**630**
16(0)**0**	**16**(0)**1**	
6((1)**0** **6**(0)**2**	**6**(0)**3** **6**(0)**4**	

7 Single Row Angular Contact Ball Bearings

For single row angular contact ball bearings the "**0**" and the "**1**" from the symbol of width series is omitted for practical use.

The most common series are:

708	**718**	**719**
7(1)**0** **7**(0)**2**	**7**(0)**3** **7**(0)**4**	

8 Cylindrical Roller Thrust Bearings

The most common series are:

811	**812**
893	**894**

N Cylindrical Roller Bearings

The letter **N** may be followed by other letters which indicate the design of the bearing in more detail.

Examples: **NU, NJ, NUP, NCF, NNU, NNCF**, etc.

If the bearing designation starts with “NN”, double or multi-row bearings are indicated.

In most cases for cylindrical roller bearings the “**0**” and the “**1**” from the symbol of width series is omitted.

The most frequently used bearing series are:

(0)**2**	(0)**3**	(0)**4**	
22	**23**		
10	**20**	**30**	**50**
18	**29**	**39**	
48	**49**	**69**	

NA Needle Roller Bearings

The designation of needle roller bearings with machined rings starts with **NK** or **NA**.

Q Four-Point Contact Ball Bearings

Depending upon their design four-point contact ball bearings are identified either by “**Q**” (split outer ring) or “**QJ**” (with split inner ring).

For four-point contact bearings the “**0**” of the symbol for the width series is omitted for practical use.

The most commonly used series are:

10	(0)**2**	(0)**3**

T Tapered Roller Bearings

The designation of metric standard tapered roller bearings is in accordance with DIN ISO355 the first letter being “**T**”.

Bore Diameter

Normally the bore diameter of a standard bearing is integrated in its base designation as a two-digit number, termed the **bore reference number**.

This bore reference number is written after the symbol indicating the bearing series, (see fig. 3.4 and fig. 3.5). The **bore reference number**, when multiplied by 5, indicates the bore diameter in millimetres.

Examples:

62**05** Single row deep groove ball bearing
Bore diameter **05** x 5 = **25mm**

NU23**36** Single row cylindrical roller bearing
Bore diameter **36** x 5 = **180mm**

33**18** Double row angular contact ball bearing
Bore diameter **18** x 5 = **90mm**

Exceptions to this rule:

In specific cases the bore diameter is indicated differently, as follows:

a) Bearings with bore diameters of 10, 12, 15 or 17 mm.

These bore diameters are identified by the following code numbers:

00 = 10 mm
01 = 12 mm
02 = 15 mm
03 = 17 mm

Example:

60**02** Single row deep groove ball bearing,
Bore diameter **15mm**

b) Bearing having bore diameters less than 10 mm and over 500 mm.

For such bearings their bore diameter will be given directly in millimetres. It is separated from the symbol of bearing series by an oblique slanting line.

Examples:

62/**2,5**	Single row deep groove ball bearing bore diameter	**2,5mm**
230/**710**	Spherical roller bearing bore diameter	**710mm**
618/**85**0	Single row deep groove ball bearing bore diameter	**850mm**

c) Bearings having bore diameters that deviate from standard sizes.

Such bore diameters are also indicated directly in millimetres, separated from the bearing base symbol using an oblique slanting line.

This also applies to bearings having bore diameters of 22, 28 and 32 mm.

For other bearings the principle has already been established in identifying the bore size in a direct uncoded manner following the identification symbol of the bearing series.

Examples:

320/**22**	Tapered roller bearing bore diameter	**22mm**
60**8**	Single row deep groove ball bearing bore diameter	**8mm**
62/**32**	Single row deep groove ball bearing bore diameter	**32mm**
12**7**	Self aligning ball bearing bore diameter	**7mm**

d) Certain bearing series

For **Magneto bearings** of the series **E, BO**, **L** and **M** the bore diameter is given directly in millimetres.

Example:

E17	Magneto bearing Bore diameter **17mm**

Suffixes

Suffixes are written following the bearings base designation.

They give some information regarding details of bearing design, as far as it deviates from the defined standard.

Suffixes must always be considered in relation to the bearing type used. As an example, the letter "**E**" will have a completely different meaning according to its bearing type.

Not all suffixes are standardised. Many details, such as details of cage or seals are defined according to the manufacturers' standards.

The following features which may deviate from the standard design will have defined and differing suffixes

- **Internal design**
- **Outer shape or profile**
- **Seals and shields**
- **Design and material of cage**
- **Tolerances and accuracy**
- **Clearance**
- **Heat treatment**
- **Grease filling**

In many cases several suffixes are presented in different combinations.

Examples of Suffixes

Suffixes of Internal Design

Changes or modifications to internal design are identified by suffixes. These suffixes are not standardised and will be used when necessary.

Examples: Suffixes **A, B, C, D, E**

3210**B** Double row angular contact ball bearing, modified design without filling slots

Suffixes Indicating Boundary Shape

Suffix K
Bearing with tapered bore, taper 1:12
Example: **1207-K**

Suffix K30
Bearing with tapered bore, taper 1:30
Example: **24138-K30**

Suffix Z
Bearing with one shield
Example: **6207-Z**

Suffix -2Z
Bearing with two shields
Example: **6207-2Z**

Suffix RS
Bearing with one seal
Example: **6207-RS**

Suffix -2RS
Bearing with two seals
Example: **6207-2RS**

Suffix -2RSR
Bearing with two RSR-seals
Example: **6208-2RSR**

Suffix -2LS
Cylindrical roller bearing with two land riding seals located on its inner ring.
Example: **NNF 5016-2LS-V**

Suffix -2LFS
Bearing with two non-contacting LFS-seals (**LFS** = **L**ow **F**riction **S**eal).
Example: **6205-2LFS**

Suffix N
Bearing with a snap ring groove in its outer ring.

Example: **6207-N**

Suffix NR
Bearing with a snap ring groove in its outer ring and fitted with a snap ring.

Example: **6008-NR**

Suffix Z-N
Bearing having a shield on one face side and a snap ring groove in the outer diameter on the opposite face.

Example: **6206-Z-N**

For bearings fitted with seals the suffix is **-RS-N**.

When fitted with two seals or shields:

Examples: **6206-2Z-N** (e.g. with two shields)
or
6206-2RS-N (e.g. with two seals)

Suffix N2
Bearing having two locating grooves on one side of outer ringor. housing washer.

Example: **QJ228-N2**

Suffix R
Bearing with flanged outer ring
Example: **33217-R**

Suffixes of Cage Design

When a cage is the “primary or standard” one fitted within a bearing no cage suffix coding is shown.

Therefore, where designs and materials of cages differ from the standard the bearing designation will have defining suffixes. The following are some suffixes used.

Cage Materials

J **Pressed steel cages**

pressed steel cages are the standard cage of many bearing types.

Thus pressed steel cages in most cases do not indicate a separate suffix.

M **Solid brass cage**

F **Solid cage made from steel or iron**

TV **Polyamide cage**

Normally polyamide 6.6 with or without glass fibres is used.

Cage Designs

Cage design symbols are normally used in conjunction with the cage material symbols.

P **Window-type cage**

H **Claw-type cage**

A **Cage guided on the bearing outer ring**

B **Cage guided on the bearing inner ring**

S **Cage with lubricating slots in the guiding surfaces.**

Examples:

MB Inner ring guided solid brass cage

MPB Inner ring guided solid brass cage, designed as window one piece type.

MAS Outer ring guided solid brass cage with lubricating slots in the guiding surfaces.

Where there are numbers following the cage symbol, these may indicate design variants of that cage type.

Examples:

M6 Roller guided solid brass cage for cylindrical roller bearings, cage body designed with trapezoid-shaped machined rivets.

MA6 Outer ring guided solid brass cage for cylindrical roller bearings, cage body designed with trapezoid-shaped machined rivets.

Bearings without Cages

Under certain circumstances a bearing may be used without cages.

In such cases the bearings are **full complement**.

Full complement bearings are identified by the following suffixes:

V full complement ball or roller bearing

VH full complement cylindrical roller bearing with self retaining roller set.

Tolerance Classes

Rolling element bearings are produced in different **tolerance classes**.

Bearings of the **standard tolerance class PN** fulfil the demands of general machinery in respect to their running and dimensional accuracy.

For special applications that require higher dimensional and geometrical accuracy the bearings can be produced to a higher precision class tolerance (i.e. P6, P5, P4 and P2).

Tolerances for most of the bearing types are standardised according to DIN 620.

For the standardised tolerance classes the following suffixes are used:

PN(P0) Bearings in **standard tolerance**.
As this is the standard the suffix PN is not used in the bearing description, historically the symbol (P0) was used.

P6 Bearings having closer tolerances than standard bearings

P5 Tolerances closer than P6

P4 Tolerances closer than P5

P2 Tolerances closer than P4

For special applications certain rolling element bearings are also produced with closer tolerances for certain features like radial run-out, side run-out with reference face etc.

Examples of bearings with close tolerances are spherical roller bearings for vibrating screen applications, design suffix **SQ34**.

The particular tolerances of those bearings are as shown in the respective product tables.

Clearance

To adjust the operating clearance of a rolling bearing when it is mounted in an optimum way most bearings are produced in different clearances.

Depending upon the particular bearing type one differentiates between **radial clearance** and **axial clearance**.

For the more common bearing types and sizes values of clearances have been defined in clearance groups according to **DIN 620**.

Clearance groups:

C1 **Smaller** clearance than C2

C2 **Smaller** clearance than CN

CN(C0) **Clearance "Normal"**
As this is the standard the suffix CN is not used in the bearing description, historically the symbol (C0) was used.

C3 Clearance **larger** than CN

C4 Clearance **larger** than C3

C5 Clearance **larger** than C4

Special clearance:

Where individual or special clearances are required which are not according to the clearance groups standardised in DIN 620 suffixes are used as part of the bearing description.

Depending upon either "radial" or "axial" clearances the suffixes "R" and "A" are used together with the minimum and maximum values of clearance expressed in microns (µm), each value separated by a "**&**". The following are typical suffixes used.

R80&150 Special **radial** clearance.
Clearance between 80 and 150 µm

A70&110 Special **axial** clearance
Clearance between 70 and 110 µm

If required the values of a clearance may be controlled within a part of a standard clearance group.

Such a restriction is indicated by a letter (**H**, **M** or **L**) that follows the symbol of the bearing clearance group.

Examples:

C2L Clearance controlled within the **lower half** of clearance group **C2**.

C3M Clearance controlled within the **middle range** of clearance group **C3**.

C4H Clearance controlled within the **upper half** of clearance group **C4**.

Tolerances and Clearance

When bearings have a special tolerance class and a specific clearance both features are combined in one symbol. In such cases the “C” for bearing clearance is omitted. The following are typical suffixes used:

Tolerance class **P6 +** clearance **C2 = P62**
Tolerance class **P5 +** clearance **C4 = P54**

Special Greases

For special operating conditions NKE bearings can also be supplied with special grease fillings according to customer’s specification or with variable grease fill mass than the standard.

To distinguish them from standard bearings these types are identified by different suffixes.

The **NKE designation system** for bearings containing special grease is as follows:

A	XX	B

A) Symbol for temperature range of grease:

LT	Low Temperature grease
MT	Medium Temperature grease
HT	High Temperature grease
LHT	Special grease suitable for Low and High Temperatures

XX) Continual number

B) Symbol for grease fill mass as a % of bearings free space

A	Filling volume 10% ÷ 15%
B	15% ÷ 25% free space of bearing
--	Filling volume 25% up to 50% (Standard)
M	Filling volume 45% up to 60%
X	Filling volume 70% up to 90% (Bearing is fully filled with grease)
C	Filling volume according to Individual customers’ specifications

Example: **LHT23**

LHT	Special grease suitable for **L**ow and **H**igh **T**emperatures
23 . .	Continual number
-	Standard grease filling mass

Designation System of Metric Tapered Roller Bearings According to DIN ISO 355

In the case of the metric taper roller bearings historically there are two different designation systems in use.

Designations for the series of metric taper roller bearings according to **DIN 616** begin with the number “3” (see also page **234**).

According to **DIN ISO 355** the designation system of metric taper roller bearings begins with a “**T**” which stands for **T**apered roller bearing, followed by a 6-digit combination of letters and numbers (fig. 3.6).

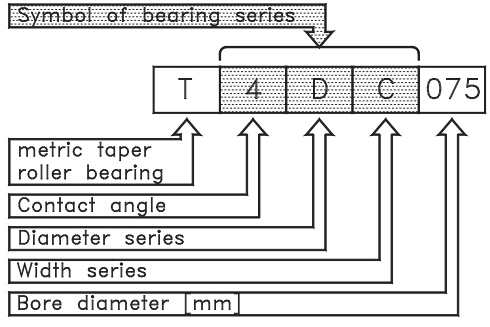

Fig. 3.6

Symbols of contact angle:

Symbol	Contact angle α	
	>	≤
1	reserved	
2	10°	13°52’
3	13°52’	15°59’
4	15°59’	18°55’
5	18°55’	23°
6	23°	27°
7	27°	30°

Table 3.1

Diameter series:

The diameter series of metric tapered roller bearings is defined by the ratio of their cross section (e.g. the ratio of bore to outer diameter):

Symbol	$\frac{D}{d^{0,77}}$	
	>	≤
A	reserved	
B	3,4	3,8
C	3,8	4,4
D	4,4	4,7
E	4,7	5,0
F	5,0	5,6
G	5,6	7,0

Table 3.2

Width series:

The width series are also defined by their boundary dimensions:

Symbol	$\frac{T}{(D - d)^{0,95}}$	
	>	≤
A	reserved	
B	0,50	0,68
C	0,68	0,80
D	0,80	0,88
E	0,88	1,00

Table 3.3

Bore diameter:

In the designation system according **DIN ISO 355** the bore diameter of metric tapered roller bearings are given as their denomination uncoded in millimetres.

Special Quality Requirements

In many applications standard bearings that are in use have been optimised for specific requirements.

Such an adjustment may be actioned by specifying certain features according to the special demands.

Such adjustments are fulfilled by the so-called Special Quality requirements (suffix SQ) which accommodate particular features, defined and required, in a bearing design for certain applications.

Some examples of **NKE Special Quality Requirements** are:

SQ1 Rolling element bearings used in railway traction motors

SQ2 Rolling element bearings used in railway axle boxes

SQ34 Spherical roller bearings for vibrating applications (shaker screens etc.)

Special Bearings

For applications where standard bearings do not perform effectively **special bearings** may be used to meet customer application requirements.

Such special bearings are “tailor-made” to suit these very special demands.

In many cases they do not have much in common with standard bearings.

To prevent these special bearings getting mixed up with standard bearings and to cover the entire range of possible variations, these special bearings have a separate designation system unique to each manufacturer.

The **NKE** designation system for **special bearings** is shown in Fig. 3.7:

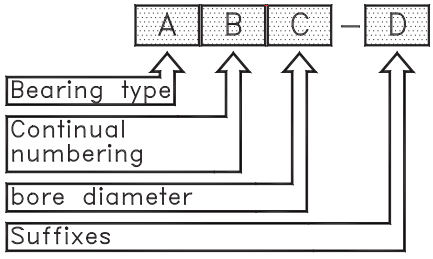

Fig. 3.7

A) Symbol for bearing type:

CRB Special cylindrical roller bearing
DGB Special deep groove ball bearing
ACB Special angular contact ball bearing
SRB Special spherical roller bearing
TRB Special taper roller bearing
THB Special thrust bearing
SG Special bearing housing

B) Continual numbering

C) Symbol for bore diameter

As for standard bearings, the bore diameter will be written according to bearing size either as a **bore reference number** (bore diameter in mm divided by 5) or as a direct size in millimetres.

If the bore diameter is written as a direct size (mm), it is separated from the bearings number by an oblique slanting line (/)

D) Suffixes

If required, special bearings may also have suffixes.

Designation System of Accessories and Parts

Adapter and Withdrawal Sleeves

The designations of **adapter and withdrawal sleeves** are combinations of one or more letters followed by several identification numbers for the bearing series they belong to including the size of the sleeves.

The **bore identification number** of an adapter or a withdrawal sleeve always identifies the bore diameter of the bearing the particular sleeve belongs to.

For the identification of the sleeve bore diameter the same system is used as for bearings.

If the bore diameter of such sleeves does not apply in the standard designation system, the nominal dimension of the sleeve bore diameter is written after the base designation, separated by an oblique slanting line.

Large sleeves are frequently used with oil holes and connecting bores for applying the oil injection method during mounting the bearing.

Examples of adapter or withdrawal sleeves:

H Metric standard adapter sleeve

H320 Adapter sleeve for shaft Ø90 mm series H3, for d = Ø100 mm

OH Adapter sleeve with oil grooves for mounting the bearing by oil injection method. In all other features they are identical to standard.

OH31/500
Adapter sleeve with oil grooves, series OH 31, d = Ø500 mm

AH Metric standard withdrawal sleeve

AH314
Withdrawal sleeve for shaft Ø65 mm, series AH3, for d = Ø70 mm

AHX Withdrawal sleeve with boundary dimensions already defined to ISO- standards.

AHX2310
Withdrawal sleeve for shaft Ø45 mm, series AHX23, for d = Ø50 mm

AOH and **AOHX**
Withdrawal sleeve with oil grooves for mounting the bearing by oil injection method. In all other features they are identical to standard sleeves of the series AH and AHX.

HA and **HE**
Adapter sleeves for inch-sized shaft diameters are for all other features identical to metric standard adapter sleeves.

Lock Nuts

The designations of **lock nuts** normally begin with "**KM**" or "**HM**", followed by letters and an identification number for the size of their thread. This thread identification number gives, when multiplied by 5, the nominal thread diameter in millimetres.

The only exception to this is locking nuts of the series **HM 30** and **HM 31**. For these types the base designation consists of a four-digit number where the first two numbers identify the series and the second two numbers indicate the size of the thread.

For locking nuts with thread diameters larger than 500 mm the nominal thread diameter is written behind the base designation, separated by an oblique slanting line.

Examples:

KM Standard lock nut with metric ISO-thread

KM30
Lock nut with metric thread M 150x2. Outer diameter 195 mm.

KML Lock nut with metric ISO thread; narrower cross section compared to standard KM lock nuts.

KML30
Lock nut with thread M 150x2. Outer diameter 180 mm.

HM Lock nuts with metric ISO trapezoidal thread.

HM52-T
Lock nut with trapezoidal thread
Tread 260x4. Outer diameter 330 mm.

HML Lock nuts with metric ISO trapezoidal thread; narrower cross section compared to standard HM-lock nuts.

HML52-T
Lock nut with trapezoidal thread
Thread 260x4. Outer diameter 310 mm.

KMT Lock nut with metric ISO thread; with grub screws for axial fixing.

KMT30
Lock nut with grub screws, thread M 150x2.

KMTA Lock nut with metric ISO thread; with grub screws for axial fixing. Although KMTA type lock nuts are similar to KMT type lock nuts, the KMTA design have a smooth cylindrical outside diameter

KMTA30
Lock nut with grub screws. Smooth outer diameter, thread M 150x2.

Locking Washers

For securing lock nuts and to protect them from becoming loose **Locking Washers** are used.

The designations of locking washers begin with "**MB**" or "**MBL**", followed by the identification number of the size. This identification number gives, multiplied by 5, the nominal bore diameter of the locking washer in millimetres.

MB Standard locking washer

MB30 Standard locking washer for lock nut KM30

MBL Locking washer for lock nuts of the KML series, cross section narrower than in case of standard MB type locking nuts.

MBL30 Locking washer for lock nut KML30

Bearing Sets

In certain application, such as bearings used in machine tool spindles, individual bearings are often combined as bearing sets.

Although this applies mainly to taper roller bearings and angular contact ball bearings, other bearing types like deep groove ball bearings may be paired as sets.

For use in sets the bearings have to be matched or paired carefully.

Bearing sets usually are identified by suffixes indicating the number of single bearings the set consists of and the arrangement of the bearings to each other.

Also the clearance or even the preload of the bearing set is normally stated.

DB Set consisting of two single bearings, (single row deep groove ball bearings, angular contact ball bearings or taper roller bearings) matched for mounting in a back-to-back arrangement.

DF Two single bearings matched for mounting in a face-to-face arrangement.

TQO Two matched double row taper roller bearings.

QBC Four single row deep groove ball bearings or angular contact ball bearings, each pair of bearings are arranged in tandem arrangement, for mounting in a back to back arrangement.

QBT Set of four single row deep groove ball bearings or angular contact ball bearings, one bearing pair is arranged back to back, this will be combined with the other bearing pair in tandem arrangement.

TR Three single row deep groove ball bearings or cylindrical roller bearing matched for equal radial load distribution.

2S Two selected bearings to be used in pairs for equal radial load distribution.

General

As well as the individual type dependent characteristics, all rolling element bearings have several common features which are clearly defined within the ISO, DIN and BSI standards.

Materials

Materials of Rings and Rolling Elements

Rings and rolling elements of NKE standard bearings are made from direct or through-hardening steels according to DIN 17230/ISO 683-17: normal section (**100Cr6**) (SAE 52100), larger bearings or heavier wall sections (**100CrMn6**).

Rolling bearings operating under severe shock loading are made from case hardening steels.

In special cases of prolonged high temperature and hardness retention requirements a variety of **tool steels** are available for rolling bearing manufacture although, the temperatures are usually restricted by the lubrication properties.

For rolling bearings operating in corrosive environments **stainless steels** are used, although this has a markedly lower hardness than the standard and therefore reduced load carrying capacity.

Heat Treatment

NKE rolling element bearings are hardened using the most modern heat treatment facilities. The rings have dimensional stability for standard operating temperatures up to **120°C (248°F)**, also short operating periods of up **150°C (302°F)** are permissible. The normal hardness values for standard heat treated components are:

Rings	**58-64 HRC**
Rolling elements	**58-64 HRC**

There is no suffix marking shown on the bearing components having the standard heat treatment (**i.e. SN**)

Constant operating temperatures of more than **+150°C (302°F)**, however, will lead to several metallurgical processes within the bearing steel that cause undesired changes, loss of hardness, dimensional and geometric accuracy.

This is why bearings which operate at constantly higher temperatures than standard require special heat treatment.

NKE produce such stabilised bearings on request. Please see data and designation in table 4.1:

Thermal Stabilisation		
up to max.	**Class**	**Factor f_t*)**
120°C (248°F)	**SN**	**1,00**
150°C (302°F)	**S0**	**1,00**
200°C (392°F)	**S1**	**0,90**
250°C (482°F)	**S2**	**0,75**
300°C (572°F)	**S3**	**0,60**

Table 4.1

Important *)

f_t = temperature reduction factor, see chapter "**Selection of bearing type and size**", page 255.

Cage Materials

The majority of all rolling bearings are fitted with cages. The standard cages of NKE rolling bearings are carefully selected to meet the individual characteristics of each bearing type and size including the required operating criterion in an optimum way.

Pressed steel cages:

Single or multiple piece pressed steel cages are made from mild steel. The multiple cage designs are riveted or welded together.

As pressed steel cages are "standard" for many bearing types such as deep groove ball bearings or tapered roller bearings, the cage type suffix marking will not appear in the bearing description.

Pressed brass cage:

Used in magneto bearings and some small deep groove ball bearings, pressed brass cages are identified by the suffix Y.

Polyamide cages:

The standard cage for some bearing types due to its optimum shape accuracy and ease of assembly, especially for double-row bearings.

Polyamide cages are often used with a filling of glassfibres to strengthen its mechanical properties. They are designed as snap-type cage or as solid window-type cage.

These cages are injection moulded and often have superior performance due to their reduced weight and design conformance.

They are suitable within the temperature range of **- 40°C up to + 120°C (- 40°F up to + 248°F)**. Polyamide cages are identified by the letter "**T**", followed by other letters and/or numbers, such as **TVP**, **TV** or **TH** this indicates design or material variants.

Solid metal cages:

These cages are machined from bar, tube, forging and cast material forms. Solid metal cages are used, when

- a very strong cage is required due to special operating conditions, such as heavy vibrations, shock loads etc. In these cases the cages are often guided either on the outer or the inner ring ribs.

- small volumes are produced where it is not economic to make expensive equipment, tooling or moulds for other cage types (e.g. special "bespoke" bearings and large bearings).

Generally, solid metal cages are manufactured in brass; other materials used are bronze, steel, and alloys etc.

The designation for solid metal cages usually contains a letter indicating its material (**M** stands for **brass**, **F** means **steel**, **L** indicates **light metal alloys**,...) and other letters or combinations of letters and figures provide more detailed information with reference to cage type and design. Examples are: **MA**, **MB**, **MPA**, **MPB**, **M6**, **FPA**, **etc**.

Special cage materials:

In the event of very special operating conditions other cage materials may be used.

Examples are wound fabric resin cages used for high speed spindle bearings and cages made from sintered materials etc.

Materials of Bearing Seals and Shields

Several bearing types are available fitted with either seals or shields. In this way the bearing position is sealed in an effective, efficient and spaces saving design arrangement as the seals or shields are contained within the overall bearing width.
Although the vast majority of bearings offered with seals or shields are ball bearings, there are some types of sealed cylindrical roller or needle roller bearings available.
Bearings that feature shields or seals on both faces are already supplied with a grease fill.

In principle a distinction has to be made between **shields** and **seals**:

Shields (-Z, -2Z)

Shields represent the simplest form of sealing. In the locating grooves, form turned (1) into the outer ring, profiled **shims of steel sheet** (2) are press fitted (see fig. 4.1).

For small bearings or miniature bearings the shields sometimes are fixed using snap rings located beside the shields

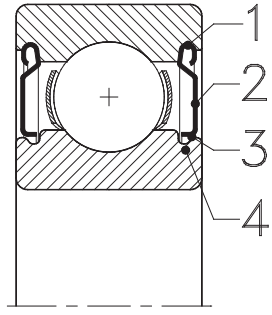

Fig. 4.1

In this way shields (Z-shields) form a simple gap seal (3) against the inner ring shoulder (4). Shields avoid an escape of grease from the bearing and provide some protection against the penetration of dust or larger foreign particles.

Seals

Deep groove ball bearing seals (fig.4.2) usually consist of a flexible material that forms a sealing closure (3). To stiffen the seal, steel washers (2) have been integrated into the rubber compound.

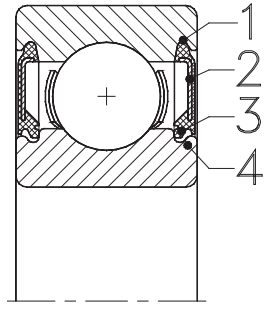

Fig. 4.2

The seals are located in grooves in the outer ring (**1**); one or more sealing lips are lightly rubbing under certain preload against the contacting inner ring face (**4**).

This provides excellent sealing and eliminates the penetration of most contamination, foreign particles and water splash.

Due to the rubbing action such seals are also called "**contacting**" or "**rubbing**" seals. Historically, many design variations have been developed.

Some examples are shown in fig. 4.3, complete:

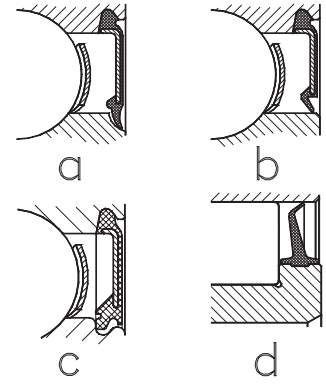

Fig. 4.3

4.3a) Contacting ball bearing seal, **RS**-type. The sealing lip touches the inner ring axially.

4.3b) Contacting ball bearing seal, **RSR**-type. In this case the sealing lip rubs radially against the ground inner ring shoulder.

4.3c) Contacting ball bearing seal, **RS2**-type. The sealing lip touches the inner ring axially.

4.3d) The land riding seal of full complement cylindrical roller bearings, type **LS** sits on the inner ring shoulder and runs on the outer ring raceway.

Speed limitation of contacting seals

All **contacting seals** generate additional heat due to the rubbing of their preloaded sealing lips.

This is why the maximum permissible speeds of bearings with contacting seals (suffix **-RS2**, **-RS2**, -**RSR**, **-2RSR** etc.) is limited.

Their maximum speed must not exceed 2/3 of the speed ratings recommended for these bearings whether open or sealed design with grease lubrication.

$$n_{gRS} = \frac{n_{gGrease} * 2}{3}$$

(Eq. 4.1)

where

$\mathbf{n_{gRS}}$ = Speed limit for the bearing, sealed version [rpm]

$\mathbf{n_{gGrease}}$ = Speed limit for the bearing with grease lubrication [rpm]

Non-Contacting Seals

For applications with higher speeds where the sealed bearings are necessary, a special designed seal is available.

This so-called **LFS**-seal (**LFS** stands for **L**ow **F**riction **S**eal, see fig. 4.4) features two sealing lips, a radial one and another in axial direction (**3**). The radial seal lip fits into a groove turned in the inner ring (**4**) and thus forms a non-contacting seal.

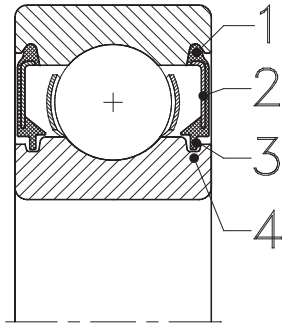

Fig. 4.4

The sealing effectiveness of **LFS**-seals is much better than shields (Z-shields), but less than the contacting seals of types **-RS2**, **-2RS2**, -**RSR**, **-2RSR**.

On the other hand, **LFS-seals** do not generate additional heat.

Thus bearings that are fitted with **LFS**-seals do not have a restriction in operating speed as do the other contacting seals.

Materials of Seals

The standard contacting seals of the types **-RS2**, **-2RS2**, -**RSR**, -**2RSR** etc, including the non-contacting LFS seals are produced using a synthetic rubber compound (Nitrile-Butadien-Rubber, in short **NBR**).

Integrated steel washers increase the seals rigidity. **NBR** is the standard material for all NKE bearings fitted with seals, therefore, suffix marking is unnecessary.

Standard seals made from synthetic **NBR** rubber are suitable for operating temperatures from -**30°C** up to **+120°C (-22°F up to +248°F)**.

For special applications, however, seals are also available in other materials.

Some examples are listed in the table below:

Seal material		Temperature - range[1])	
Symbol	Material	>	≤
NBR	Nitrile-Butadien-rubber	**-30°C** (-22°F)	**+120°C** (+248°F)
ACM	Acrylic rubber	**-20°C** (-4°F)	**+150°C** (+302°F)
MVQ	Silicon rubber	**-60°C** (-76°F)	**+180°C** (+356°F)
FPM	Flour rubber	**-30°C** (-22°F)	**+200°C** (+392°F)

Table 4.2

1) Values for guidance only. The temperature range may vary according to the individual material composition.

Grease Filling

NKE rolling bearings with seals or shields on both sides (suffixes **-2Z**, **-2RS2**, **-2RSR** or **-2LFS**) are already supplied grease filled.

The normal grease-fill is approximately 25% to 50% of the bearings cavities.

As standard grease NKE uses:

- Single deep groove ball bearings with inner diameter up to 60mm: NKE lithium soap LHT23, Di-Esteröl, NLGI class2

  This grease is qualified for working temperature -50°C (-58°F) to +150°C (+302°F). LHT23 is characteristics about low noise level and noise absorbing.

- For larger deep groove ball bearings and sealed angular contact ball bearing, spherical roller bearings, cam rollers and housing bearings: NKE lithium soap MT2, mineral oil NLGI class 3.

  This grease is qualified for working temperatures -30°C (-22°F) to +120°C (+266°F).

- NKE IKOS integral tapered roller bearings: NKE lithium soap MT32, mineral oil NLGI class 2.

  This grease is qualified for working temperature -20°C (-4°F) to +130°C (+266°F).

Special grease fillings

For special applications all NKE rolling bearings can also be supplied with different grease types and specific grease filling mass.

To identify these variants from standard greased bearings, they have different designations.

The **NKE designation system** for rolling element bearings with special greasing consists of following symbols:

Boundary Dimensions of Rolling Bearings

The boundary dimensions for all standard bearings are standardised and comply with the relevant national and international standards (i.e. ISO, DIN, BS...)

This ensures that standard rolling bearings are internationally interchangeable.

The **standard plans** defined in the above provide boundary dimensions for the different bearing types. The standardised dimensions like **bore diameter (d), outer diameter (D), bearing width (B)** or **height** (**H, T**) and **minimum chamfer dimensions (r)** (see also fig. 4.5).

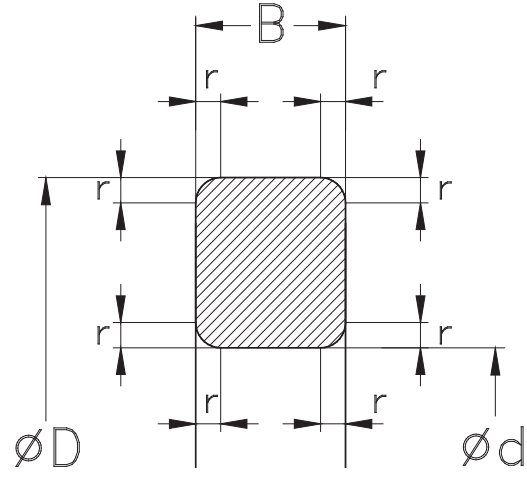

Fig. 4.5

Standard Plans
Boundary Dimensions

The standard plans as defined by **ISO**, **BS**, DIN standards determine the cross section of the **standard bearings** according to mathematical formula.

In these standard plans for each **bore diameter** several different possible **outer diameters**, **widths** or, in case of thrust bearings, **heights** have been determined.

In this way **diameter series** and **width series** for standard bearings has been defined.

The organisation of standard bearing designations is also based on this.

The **base designation** of a standard bearing, for example, consists of a symbol for each bearing type, the width series and its diameter series, (fig. 4.6).

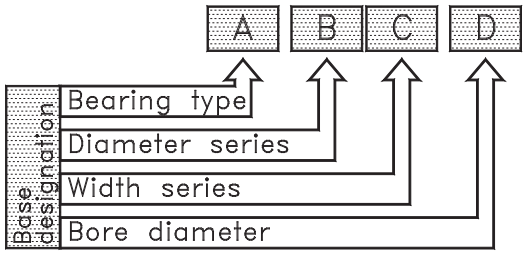

Fig. 4.6

Using this system it is possible to select, for a given shaft diameter, bearings with different cross sections and thus different load ratings. See the example shown in fig. 4.7.

This enables the optimum solution to accommodate the requirements of the machine or equipment, with particular reference to shaft sizes, space utilisation and bearing service life expectations.

Some examples of different width and diameter series are shown below.

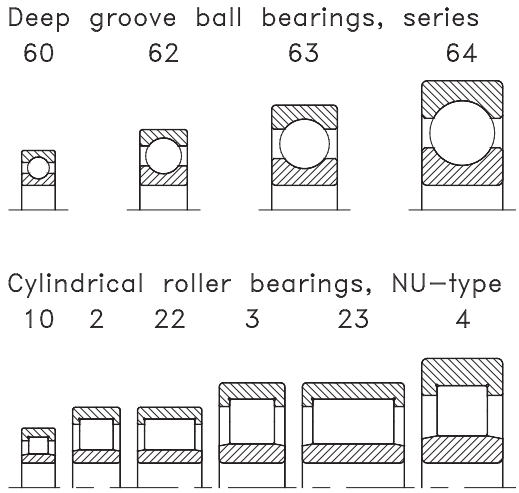

Fig. 4.7

As shown in fig. 4.7 there are also wider width series of cylindrical roller bearings (series **N 22**, **N 23**..).

These wider width series provide higher load ratings but require more space compared to “normal” cylindrical roller bearings, despite the identical shaft and outer diameter sizes.

For more detailed information see section “**Designation System**”, page **212**.

Fillet Dimensions

To avoid sharp edges and assist in their mounting, bearing rings have profiled corners.

The **fillet dimensions** are defined by the values in **ISO 582** and respectively **DIN 620 / part 6**.

These standards give minimum and maximum values of fillet dimensions both in radial (**r_1**, **r_3**) and axial directions (**r_2**, **r_4**), (fig. 4.8).

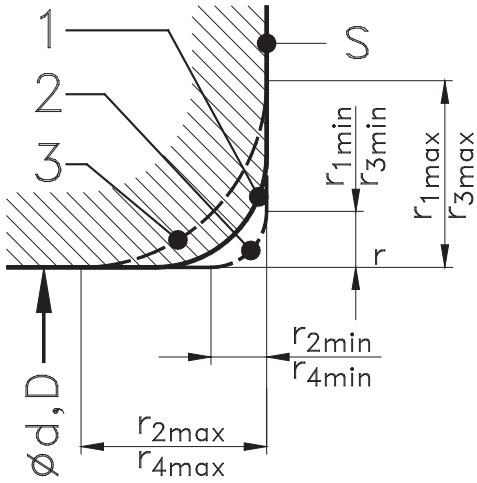

Fig. 4.8

Ø d, D	bearing bore or outer diameter
S	bearing face
r_{1min}	smallest single fillet dimension
r_{3min}	in radial direction
r_{2min}	smallest single fillet dimension
r_{4min}	in axial direction
r_{1max}	largest single fillet dimension
r_{3max}	in radial direction
r_{2max}	largest single fillet dimension
r_{4max}	in axial direction
1	real fillet profile
2	profile of smallest permissible fillets
3	profile of largest permissible fillets

Minimum values for fillet dimensions of each individual bearing are stated in the product tables. The maximum values are listed in the following tables:

Limit Values of Fillet Dimensions for Metric Radial Bearings (Excluding Tapered Roller Bearings)

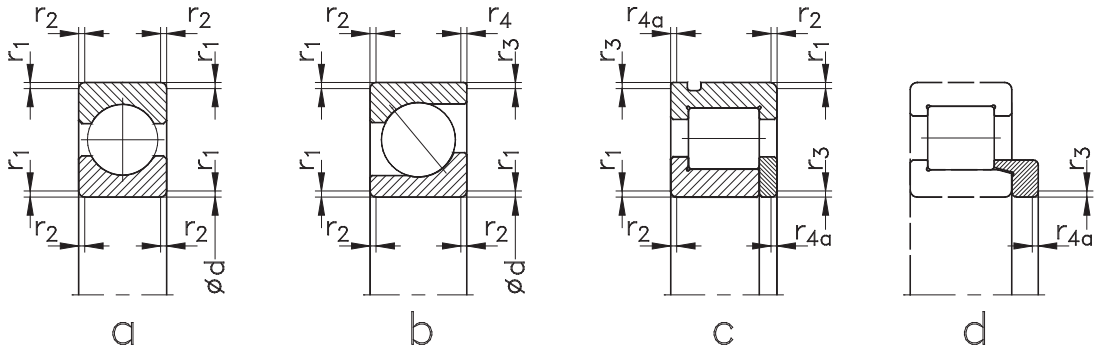

Fig. 4.9

4.9 a) Value of fillet dimensions for **symmetric** bearing sections

4.9 b) Fillet dimensions for **asymmetric** bearing sections

4.9 c) Fillet dimensions for snap ring grooves on outer rings and side plate

4.9 d) Value of fillet dimensions for separate thrust collars
(identical indices mean same nominal values)

Table 4.3: Limit values for fillet dimensions of radial bearings (except tapered roller bearings)

$r_{s\,min}$	Ø d,D >	Ø d,D ≤	r_1; r_3 max	r_2; r_4 [1]) max	r_{4a} max
0,05	-	-	0,1	0,2	0,1
0,08	-	-	0,16	0,3	0,16
0,1	-	-	0,2	0,4	0,2
0,15	-	-	0,3	0,6	0,3
0,2	-	-	0,5	0,8	0,5
0,3	-	40	0,6	1	0,8
	40	-	0,8	1	0,8
0,5	-	40	1	2	1,5
	40	-	1,3	2	1,5
0,6	-	40	1	2	1,5
	40	-	1,3	2	1,5
1	-	50	1,5	3	2,2
	50	-	1,9	3	2,2
1,1	-	120	2	3,5	2,7
		-	2,5	4	2,7

[1]) For miniature bearings with widths ≤ 2 mm, the r_{1max} values apply.

Limit Values for Fillet Dimensions of Metric Radial Bearings (excluding Tapered Roller Bearings)

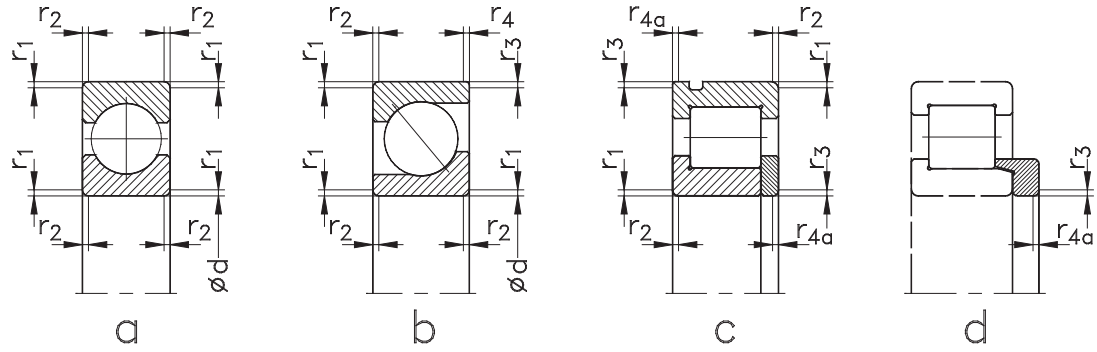

Continued from table 4.3:

$r_{s\,min}$	Ø d,D >	Ø d,D ≤	r_1; r_3 max	r_2; r_4 max	r_{4a} max
1,5	-	120	2,3	4	3,5
	120	-	3	5	3,5
2	-	80	3	4,5	4
	80	220	3,5	5	4
	220	-	3,8	6	4
2,1	-	280	4	6,5	4,5
	280	-	4,5	7	4,5
2,5	-	100	3,8	6	5
	100	280	4,5	6	5
		-	5	7	5
3	-	280	5	8	5,5
		-	5,5	8	5,5
4	-	-	6,5	9	6,5
5	-	-	8	10	8
6	-	-	10	13	10
7,5	-	-	12,5	17	12,5
9,5	-	-	15	19	15
12	-	-	18	24	18
15	-	-	21	30	21
19	-	-	25	38	25

Limit Values for the Fillet Dimensions of Metric Tapered Roller Bearings

$r_{s\,min}$	Ø d,D >	Ø d,D ≤	r_1; r_3 max	r_2; r_4 max
0,3	-	40	0,7	1,4
	40	-	0,9	1,6
0,6	-	40	1,1	1,7
	40	-	1,3	2
1	-	50	1,6	2,5
	50	-	1,9	3
1,5	-	120	2,3	3
	120	250	2,8	3,5
	250	-	3,5	4
2	-	120	2,8	4
	120	250	3,5	4,5
	250	-	4	5
2,5	-	120	3,5	5
	120	250	4	5,5
	250	-	4,5	6
3	-	120	4	5,5
	120	250	4,5	6,5
	250	400	5	7
	400	-	5,5	7,5
4	-	120	5	7
	120	250	5,5	7,5
	250	400	6	8
	400	-	6,5	8,5
5	-	180	6,5	8
	180	-	7,5	9
6	-	180	7,5	10
		-	9	11

Table 4.4

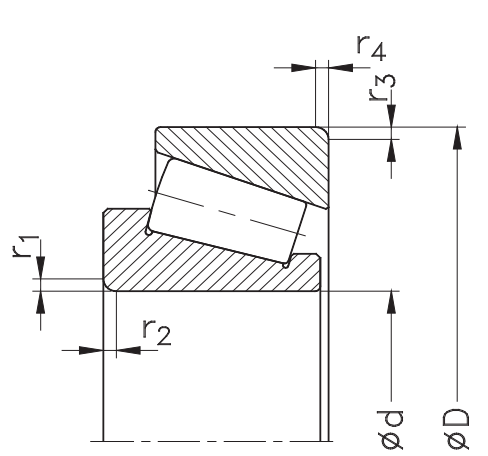

Fig. 4.10

Limit Values for the Fillet Dimensions of Thrust Bearings

$r_{s\,min}$	r_1; r_2 max
0,05	0,1
0,08	0,16
0,1	0,2
0,15	0,3
0,2	0,5
0,3	0,8
0,6	1,5
1	2,2
1,1	2,7
1,5	3,5
2	4
2,1	4,5
3	5,5
4	6,5
5	8
6	10
7,5	12,5
9,5	15
12	18
15	21
19	25

Table 4.5

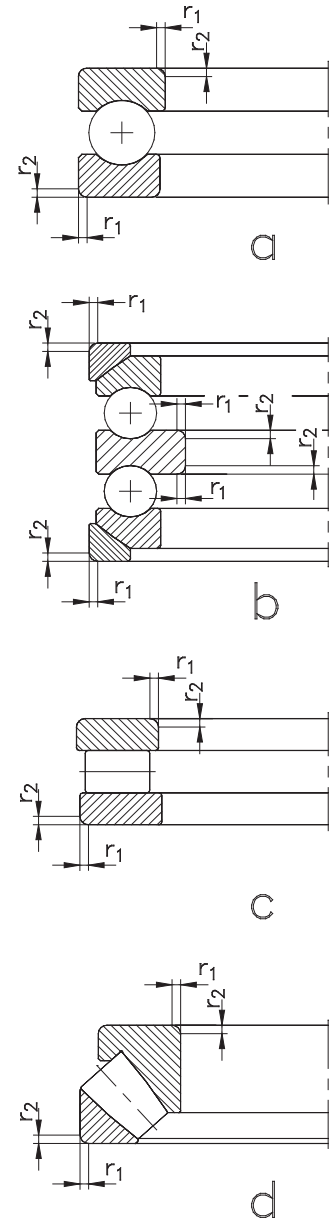

4.11a) Single direction thrust ball bearing

4.11b) Double direction thrust ball bearing with spheroid housing washers and seating washers + centre washer

4.11c) Single direction cylindrical roller thrust bearing

4.11d) Spherical roller thrust bearing

Fig. 4.11

General

The following tables are standardised and defined in the international valid standards DIN ISO 1132 and relevant DIN 620 part 2.

Standard values for tolerances including the symbols used.

Tolerance Symbols Used

Bore Diameter

d	nominal bore diameter
d_s	single bore diameter
d_{mp}	mean bore diameter in one radial plane
$d_{ps\ max}$	largest bore diameter in one radial plane
$d_{ps\ min}$	smallest bore diameter in one radial plane
Δ_{dmp}	$d_{mp} - d$ deviation of mean bore diameter from nominal
Δ_{ds}	$d_s - d$ deviation of a single bore diameter from nominal
Δ_{d1mp}	$d_{1mp} - d_1$ deviation of mean bore diameter fromnominal, in the case of tapered boresat the large theoretical bore diameter
V_{dp}	$d_{ps\ max} - d_{ps\ min}$ variation of bore diameter in one radial plane
V_{dmp}	$d_{mp\ max} - d_{mp\ min}$ variation of mean bore diameter; difference between largest and smallest mean bore diameter

Outer Diameter

D	nominal outer diameter
D_s	single outer diameter
D_{mp}	mean outer diameter in one radial plane
$D_{ps\ max}$	largest outer diameter in one radial plane
$D_{ps\ min}$	smallest outer diameter in one radial plane
Δ_{Dmp}	$D_{mp} - D$ deviation of mean outer diameter from nominal
Δ_{Ds}	$D_s - D$ deviation of a single outer diameter from nominal
V_{Dp}	$D_{ps\ max} - D_{ps\ min}$ variation of outer diameter in one radial plane
V_{Dmp}	$D_{mp\ max} - D_{mp\ min}$ variation of mean outer diameter; difference between largest and smallest mean outer diameter

Width and Height

B nominal inner ring width

C nominal outer ring width

B_s single width of inner ring

C_s single width of outer ring

Δ_{Bs} **B_s - B**
deviation of a single inner ring ring width from nominal

Δ_{Cs} **C_s - C**
deviation of a single outer ring width from nominal

V_{Bs} **B_{smax} - B_{smin}**
variation of inner ring width

V_{Cs} **C_{smax} - C_{smin}**
variation of outer ring width

T nominal total height of tapered roller bearings

T_s single height of a tapered roller bearing

T_{1s} single height of a tapered roller bearing cone assembled with master cup

T_{2s} single height of a tapered roller bearing cup assembled with master cone

ΔT_s $T_s - T$, $\Delta_{T1s} = T_{1s} - T_1$, $\Delta_{T2s} = T_{2s} - T_2$
deviation of a single width of a tapered roller bearing from nominal

H_s , H_{1s}, H_{2s}, H_{3s}, H_{4s}
single height of a thrust bearing

ΔH_s **$H_s - H$, $\Delta_{H1s} = H_{1s} - H_1$, $\Delta_{H2s} = H_{2s} - H_2$**
deviation of a single bearing height of a thrust bearing from nominal

Running Accuracy

K_{ia} **radial run out of inner ring**
within assembled bearing

K_{ea} **radial run out of outer ring**
within assembled bearing

S_d **side face run out of inner ring**
side face to bearing bore

S_D **outside inclination variation**;
variation in inclination of the outside of cylindrical surface to outer ring side face

S_{ia} **side face run out of radial bearings**

S_{ea} **side faces run out of radial bearings**

S_i **thickness variation** of the **shaft washer** for thrust bearings, raceway to outside or back face

S_e **thickness variation** of the **housing washer** for thrust bearings raceway to outside or back face

Tolerances for NKE radial bearings (excluding tapered roller bearings)

Inner ring

All dimensions shown in **[mm]**

Nominal bore diameter	over	2,5	10	18	30	50	80	120	180	250	315	400	500	630	800	1000	1250	1600
	incl.	10	18	30	50	80	120	180	250	315	400	500	630	800	1000	1250	1600	2000

Tolerance class PN (normal)

Tolerances in **[µm]**

Bore, deviation	Δ_{dmp}	0 -8	0 -8	0 -10	0 -12	0 -15	0 -20	0 -25	0 -30	0 -35	0 -40	0 -45	0 -50	0 -75	0 -100	0 -125	0 -160	0 -200
Variation V_{dp}	Diameter series 7, 8, 9	10	10	13	15	19	25	31	38	44	50	56	63					
	0, 1	8	8	10	12	19	25	31	38	44	50	56	63					
	2, 3, 4	6	6	8	9	11	15	19	23	26	30	34	38					
Variation	V_{dmp}	6	6	8	9	11	15	19	23	26	30	34	38					
Bore, taper 1:12 Deviation	Δ_{dmp}	+15 0	+18 0	+21 0	+25 0	+30 0	+35 0	+40 0	+46 0	+52 0	+57 0	+63 0	+70 0	+80 0	+90 0	+105 0	+125 0	+150 0
Deviation	$\Delta_{d1mp} - \Delta_{dmp}$	+15 0	+18 0	+21 0	+25 0	+30 0	+35 0	+40 0	+46 0	+52 0	+57 0	+63 0	+70 0	+80 0	+90 0	+105 0	+125 0	+150 0
Variation	V_{dp}	10	10	13	15	19	25	31	38	44	50	56						
Bore, taper 1:30 Deviation	Δ_{dmp}					+15 0	+20 0	+25 0	+30 0	+35 0	+40 0	+45 0	+50 0	+75 0	+100 0	+125 0	+160 0	+200 0
Deviation	$\Delta_{d1mp} - \Delta_{dmp}$					+35 0	+40 0	+50 0	+55 0	+60 0	+65 0	+75 0	+85 0	+100 0	+100 0	+115 0	+125 0	+150 0
Variation	V_{dp}					19	25	31	38	44	50	56	63					
Ring width deviation	Δ_{Bs}	0 -120	0 -120	0 -120	0 -120	0 -150	0 -200	0 -250	0 -300	0 -350	0 -400	0 -450	0 -500	0 -750	0 -1000	0 -1250	0 -1600	0 -2000
Ring width Variation	V_{Bs}	15	20	20	20	25	25	30	30	35	40	50	60	70	80	100	120	140
Radial run out	K_{ia}	10	10	13	15	20	25	30	40	50	60	65	70	80	90	100	120	140

Tolerance class P6

Tolerances in **[µm]**

Deviation	Δ_{dmp}	0 -7	0 -7	0 -8	0 -10	0 -12	0 -15	0 -18	0 -22	0 -25	0 -30	0 -35	0 -40	0 -50	0 -60	0 -75	0 -90	0 -115
Variation V_{dp}	Diameter series 7, 8, 9	9	9	10	13	15	19	23	28	31	38	44	50					
	0, 1	7	7	8	10	15	19	23	28	31	38	44	50					
	2, 3, 4	5	5	6	8	9	11	14	17	19	23	26	30					
Variation	V_{dmp}	5	5	6	8	9	11	14	17	19	23	26	30					
Ring width deviation	Δ_{Bs}	0 -120	0 -120	0 -120	0 -120	0 -150	0 -200	0 -250	0 -300	0 -350	0 -400	0 -450	0 -500	0 -750	0 -1000	0 -1250	0 -1600	0 -2000
Ring width variation	V_{Bs}	15	20	20	20	25	25	30	30	35	40	45	50	55	60	70	70	80
Radial run out	K_{ia}	6	7	8	10	10	13	18	20	25	30	35	40	45	50	60	70	80

Tolerances for NKE radial bearings (excluding tapered roller bearings)

Outer ring

All dimensions shown in **[mm]**

Nominal outer diameter																		
over	**6**	**18**	**30**	**50**	**80**	**120**	**150**	**180**	**250**	**315**	**400**	**500**	**630**	**800**	**1000**	**1250**	**1600**	**2000**
incl.	**18**	**30**	**50**	**80**	**120**	**150**	**180**	**250**	**315**	**400**	**500**	**630**	**800**	**1000**	**1250**	**1600**	**2000**	**2500**

Tolerance class PN (normal)

Tolerances in **[µm]**

Deviation	Δ_{Dmp} [1]	0 -8	0 -9	0 -11	0 -13	0 -15	0 -18	0 -25	0 -30	0 -35	0 -40	0 -45	0 -50	0 -75	0 -100	0 -125	0 -160	0 -200	0 -250
Variation V_{Dp}	Diameter series 7, 8, 9	10	12	14	16	19	23	31	38	44	50	56	63	94	125				
	0, 1	8	9	11	13	19	23	31	38	44	50	56	63	94	125				
	2, 3, 4	6	7	8	10	11	14	19	23	26	30	34	38	55	75				
	sealed bearings 2, 3, 4	10	12	16	20	26	30	38											
Variation	V_{Dmp}	6	7	8	10	11	14	19	23	26	30	34	38	55	75				
Radial run out	K_{ea}	15	15	20	25	35	40	45	50	60	70	80	100	120	140	160	190	220	250

[1] The deviation Δ_{Dmp} for all Magneto bearings is uniform 0 / +10 µm
The width tolerances Δ_{Cs} and V_{Cs} are identical to Δ_{Bs} and V_{Bs} of the inner ring of the same bearing.

Tolerance class P6

Tolerances in **[µm]**

Deviation	Δ_{Dmp}	0 -7	0 -8	0 -9	0 -11	0 -13	0 -15	0 -18	0 -20	0 -25	0 -28	0 -33	0 -38	0 -45	0 -60	0 -75	0 -90	0 -115	0 -135
Variation V_{Dp}	Diameter series 7, 8, 9	9	10	11	14	16	19	23	25	31	35	41	48	56	75				
	0, 1	7	8	9	11	16	19	23	25	31	35	41	48	56	75				
	2, 3, 4	5	6	7	8	10	11	14	15	19	21	25	29	34	45				
	sealed bearings 0,1,2, 3, 4	9	10	13	16	20	25	30											
Variation	V_{Dmp}	5	6	7	8	10	11	14	15	19	21	25	29	34	45				
Radial run out	K_{ea}	8	9	10	13	18	20	23	25	30	35	40	50	60	75	85	100	100	120

The width tolerances Δ_{Cs} and V_{Cs} are identical to Δ_{Bs} and V_{Bs} of the inner ring of the same bearing.

Tolerances for NKE radial bearings (excluding tapered roller bearings)

Inner ring

All dimensions shown in **[mm]**
Tolerances in **[µm]**

Nominal bore diameter	over	2,5	10	18	30	50	80	120	180	250	315	400	500	630	800	1000	1250	1600
	incl.	10	18	30	50	80	120	180	250	315	400	500	630	800	1000	1250	1600	2000

Tolerance class P5

Tolerances in **[µm]**

Deviation	Δ_{dmp}	0 -5	0 -5	0 -6	0 -8	0 -9	0 -10	0 -13	0 -15	0 -18	0 -23	0 -28	0 -35	0 -45	0 -60	0 -75	0 -90	0 -115
Variation V_{dp}	Diameter series 7, 8, 9	5	5	6	8	9	10	13	15	18	23							
	0, 1, 2, 3, 4	4	4	5	6	7	8	10	12	14	18							
Variation	V_{dmp}	3	3	3	4	5	5	7	8	9	12							
Ring width deviation	Δ_{Bs}	0 -40	0 -80	0 -120	0 -120	0 -150	0 -200	0 -250	0 -300	0 -350	0 -400	0 -450	0 -500	0 -750	0 -1000	0 -1250	0 -1600	0 -2000
Ring width variation	V_{Bs}	5	5	5	5	6	7	8	10	13	15	17	20	26	32	38	45	55
Radial run out	K_{ia}	4	4	4	5	5	6	8	10	13	15	17	19	22	26	30	35	40
side face runout	S_d	7	7	8	8	8	9	10	11	13	15	17	20	26	32	38	45	55
side face runout	S_{ia}	7	7	8	8	8	9	10	13	15	20	23	25	30	30	30	30	30

1) The values of side face run out S_{ia} apply to deep groove ball bearings

Tolerances for NKE radial bearings (excluding tapered roller bearings)

Outer ring

All dimensions shown in **[mm]**

Nominal outer diameter	over	6	18	30	50	80	120	150	180	250	315	400	500	630	800	1000	1250	1600	2000
	incl.	18	30	50	80	120	150	180	250	315	400	500	630	800	1000	1250	1600	2000	2500

Tolerance class P5

Tolerances in **[µm]**

Deviation	Δ_{Dmp}	0 -5	0 -6	0 -7	0 -9	0 -10	0 -11	0 -13	0 -15	0 -18	0 -20	0 -23	0 -28	0 -35	0 -50	0 -63	0 -80	0 -100	0 -125
Variation V_{Dp}	Diameter series 7, 8, 9	5	6	7	9	10	11	13	15	18	20	23	28	35					
	0, 1, 2, 3, 4	4	5	5	7	8	8	10	11	14	15	17	21	26					
Variation	V_{Dmp}	3	3	4	5	5	6	7	8	9	10	12	14	18					
Ring width variation	V_{Cs}	5	5	5	6	8	8	8	10	11	13	15	18	20	25	30	35	38	45
Radial run out	K_{ea}	5	6	7	8	10	11	13	15	18	20	23	25	30	35	40	45	55	65
Outside inclination variation	S_D	8	8	8	8	9	10	10	11	13	13	15	18	20	25	30	35	40	50
Side face run out	S_{ea} [1)]	8	8	8	10	11	13	14	15	18	20	23	25	30	35	45	55	55	55

[1)] The values of side face run out S_{ea} apply to deep groove ball bearings
The width tolerance Δ_{Cs} is identical to Δ_{Bs} of the inner ring of the same bearing.

Tolerances for metric NKE tapered roller bearings

Inner ring

All dimensions shown in **[mm]**
Tolerances in **[µm]**

Nominal bore diameter	over	10	18	30	50	80	120	180	250	315	400	500	630	800
	incl.	18	30	50	80	120	180	250	315	400	500	630	800	1000

Tolerance class PN (normal)

Deviation	Δ_{dmp}	0 -12	0 -12	0 -12	0 -15	0 -20	0 -25	0 -30	0 -35	0 -40	0 -45	0 -50	0 -75	0 -100
Variation	V_{dp}	12	12	12	15	20	25	30	35	40	45	50	75	100
	V_{dmp}	9	9	9	11	15	19	23	26	30				
Ring width deviation	Δ_{Bs}	0 -120	0 -120	0 -120	0 -150	0 -200	0 -250	0 -300	0 -350	0 -400	0 -450	0 -500	0 -750	0 -1000
Radial run out	K_{ia}	15	18	20	25	30	35	50	60	70	70	85	100	120
Ring width variation	Δ_{Ts}	+200 0	+200 0	+200 0	+200 0	+200 -200	+350 -250	+350 -250	+350 -250	+400 -400	+400 -400	+500 -500	+600 -600	+750 -750
	Δ_{T1s}	+100 0	+100 0	+100 0	+100 0	+100 -100	+150 -150	+150 -150	+150 -150	+200 -200				
	Δ_{T2s}	+100 0	+100 0	+100 0	+100 0	+100 -100	+200 -100	+200 -100	+200 -100	+200 -200				

Tolerance class P6X

Deviation	Δ_{dmp}	0 -12	0 -12	0 -12	0 -15	0 -20	0 -25	0 -30	0 -35	0 -40				
Variation	V_{dp}	12	12	12	15	20	25	30	35	40				
	V_{dmp}	9	9	9	11	15	19	23	26	30				
Ring width deviation	Δ_{Bs}	0 -50	0 -50	0 -50	0 -50	0 -50	0 -50	0 -50	0 -50	0 -50				
Radial run out	K_{ia}	15	18	20	25	30	35	50	60	70				
Ring width variation	Δ_{Ts}	+100 0	+100 0	+100 0	+100 0	+100 0	+150 0	+150 0	+200 0	+200 0				
	Δ_{T1s}	+50 0	+50 0	+50 0	+50 0	+50 0	+50 0	+50 0	+100 0	+100 0				
	Δ_{T2s}	+50 0	+50 0	+50 0	+50 0	+50 0	+100 0	+100 0	+100 0	+100 0				

Tolerances for metric NKE tapered roller bearings

Outer ring

All dimensions shown in **[mm]**
Tolerances in **[µm]**

Nominal outer diameter	over	18	30	50	80	120	150	180	250	315	400	500	630	800	1000
	incl.	30	50	80	120	150	180	250	315	400	500	630	800	1000	1250

Tolerance class PN (normal)

Deviation	Δ_{Dmp}	0 -12	0 -14	0 -16	0 -18	0 -20	0 -25	0 -30	0 -35	0 -40	0 -45	0 -50	0 -75	0 -100	0 -125
Variation	V_{Dp}	12	14	16	18	20	25	30	35	40	45	50	75	100	125
	V_{Dmp}	9	11	12	14	15	19	23	26	30	34	38			
Radial run out	K_{ea}	18	20	25	35	40	45	50	60	70	80	100	120	120	120

The width tolerance Δ_{Cs} is identical to Δ_{Bs} of the inner ring of the same bearing.

Tolerance class P6X

Deviation	Δ_{Dmp}	0 -12	0 -14	0 -16	0 -18	0 -20	0 -25	0 -30	0 -35	0 -40	0 -45	0 -50			
Variation	V_{Dp}	12	14	16	18	20	25	30	35	40	45	50			
	V_{Dmp}	9	11	12	14	15	19	23	26	30	34	38			
Ring width deviation	Δ_{Cs}	0 -100	0 -100	0 -100	0 -100	0 -100	0 -100	0 -100	0 -100	0 -100	0 -100	0 -100			
Radial run out	K_{ea}	18	20	25	35	40	45	50	60	70	80	100			

The width tolerance Δ_{Cs} is identical to Δ_{Bs} of the inner ring of the same bearing.

Tolerances for metric NKE tapered roller bearings

Inner ring

All dimensions shown in **[mm]**
Tolerances in **[µm]**

Nominal bore diameter	over	10	18	30	50	80	120	180	250	315	400	500	630
	incl.	18	30	50	80	120	180	250	315	400	500	630	800

Tolerance class P5

Deviation	Δ_{dmp}	0 -7	0 -8	0 -10	0 -12	0 -15	0 -18	0 -22	0 -25	0 -30	0 -35	0 -40	0 -75
Variation	V_{dp}	5	6	8	9	11	14	17					
	V_{dmp}	5	5	5	6	8	9	11					
Ring width deviation	Δ_{Bs}	0 -200	0 -200	0 -240	0 -300	0 -400	0 -500	0 -600					
Radial run out	K_{ia}	5	5	6	7	8	11	13					
Side face run out	S_d	7	8	8	8	9	10	11	13	15	17	20	30
Ring width deviation	Δ_{Ts}	+200 -200	+200 -200	+200 -200	+200 -200	+200 -200	+350 -250	+350 -250	+350 -250	+400 -400	+400 -400	+500 -500	+600 -600

Tolerances for metric NKE tapered roller bearings

Outer ring

All dimensions shown in **[mm]**
Tolerances in **[µm]**

Nominal	over	**18**	**30**	**50**	**80**	**120**	**150**	**180**	**250**	**315**	**400**	**500**	**630**	**800**
outer diameter	incl.	**30**	**50**	**80**	**120**	**150**	**180**	**250**	**315**	**400**	**500**	**630**	**800**	**1000**

Tolerance class P5

Deviation	Δ_{Dmp}	0 -8	0 -9	0 -11	0 -13	0 -15	0 -18	0 -20	0 -25	0 -28	0 -33	0 -38	0 -45	0 -60
Variation	V_{Dp}	6	7	8	10	11	14	15	19	22				
	V_{Dmp}	5	5	6	7	8	9	10	13	14				
Radial run out	K_{ea}	6	7	8	10	11	13	15	18	20	23	25	30	35
Outsideinclination variation deviation	S_D	8	8	8	9	10	10	11	13	13	15	18	20	30

The width tolerance Δ_{Cs} is identical to Δ_{Bs} of the inner ring of the same bearing.

Tolerances for NKE inch-sized tapered roller bearings

Inner ring

All dimensions in [mm]

Nominal bore diameter	over	**--**	**76,2**	**266,7**	**304,8**	**609,6**
	Incl.	**76,2**	**266,7**	**304,8**	**609,6**	**914,4**

Tolerance class 4 (Normal)

tolerance n **µm**

Deviation	Δ_{ds}	+13 0	+25 0	+25 0	+51 0	+76 0
Ring width deviation	Δ_{Bs}	+76 -254	+76 -254	+76 -254	+76 -254	+76 -254

Tolerance class 2

Deviation	Δ_{ds}	+13 0	+25 0	+25 0	+51 0	+76 0
Ring width deviation	Δ_{Bs}	+76 -254	+76 -254	+76 -254	+76 -254	-- --

Tolerance class 3

Tolerance class 2 Deviation	Δ_{ds}	+13 0	+13 0	+13 0	+25 0	+38 0
Ring width deviation	Δ_{Bs}	+76 -254	+76 -254	+76 -254	+76 -254	+76 -254

Overall width of the bearing, single row

Nominal bore diameter	over	--	101,6	266,7	304,8	304,8	609,6
	Incl.	101,6	266,7	304,8	609,6	609,6	--
Nominal outer diameter	over	--	--	--	--	508	--
	Incl	--	--	--	508	--	--

Width deviation Δ_{Ts}	Class 4	+203 0	+356 -254	+356 -254	+381 -381	+381 -381	+381 -381
	Class 2	+203 0	+203 0	+203 0	+381 -381	-- --	-- --
	Class 3	+203 -203	+203 -203	+203 -203	+203 -203	+381 -381	+381 -381

Tolerances for NKE inch-sized tapered roller bearings

Outer ring

All dimensions in **[mm]**

Nominal outer diameter	over	--	266,7	304,8	609,6	914,4	1219,2
	incl.	266,7	304,8	609,6	914,4	1219,2	--

Tolerance class 4 (Normal)

tolerance in **µm**

Deviation	Δ_{Ds}	+25 0	+25 0	+51 0	+76 0	+102 0	+127 0
Ring width deviation	Δ_{Cs}	+51 -254	+51 -254	+51 -254	+51 -254	+51 -254	+51 -254

Tolerance class 2

Deviation	Δ_{Ds}	+25 0	+25 0	+51 0	+76 0	-- --	-- --
Ring width deviation	Δ_{Cs}	+51 -254	+51 -254	+51 -254	+51 -254	-- --	-- --

Tolerance class 3

Deviation	Δ_{Ds}	+13 0	+13 0	+25 0	+38 0	+51 0	+76 0
Ring width deviation	Δ_{Cs}	+51 -254	+51 -254	+51 -254	+51 -254	+51 -254	+51 -254

Tolerances for NKE thrust bearings

Shaft washer

All dimensions shown in **[mm]**
Tolerances in **[µm]**

Nominal bore diameter	over	-	18	30	50	80	120	180	250	315	400	500	630	800	1000
	incl.	18	30	50	80	120	180	250	315	400	500	630	800	1000	1250

Tolerance class PN (normal)

Deviation	Δ_{dmp}	0 -8	0 -10	0 -12	0 -15	0 -20	0 -25	0 -30	0 -35	0 -40	0 -45	0 50	0 -75	0 -100	0 -125
Variation	V_{dp}	6	8	9	11	15	19	23	26	30	34	38			
Thickness variation	S_i *)	10	10	10	10	15	15	20	25	30	30	35	40	45	50
Seating washer Deviation	Δ_{du}	+70 0	+70 0	+85 0	+100 0	+120 0	+140 0	+140 0	+160 0	+180 0	+180 0				

Tolerance class P6

Deviation	Δ_{dmp}	0 -8	0 -10	0 -12	0 -15	0 -20	0 -25	0 -30	0 -35	0 -40	0 -45	0 -50	0 -75	0 -100	0 -125
Variation	V_{dp}	6	8	9	11	15	19	23	26	30	34	38			
Thickness variation	S_i *)	5	5	6	7	8	9	10	13	15	18	21	25	30	35

Tolerance class P5

Deviation	Δ_{dmp}	0 -8	0 -10	0 -12	0 -15	0 -20	0 -25	0 -30	0 -35	0 -40	0 -45	0 -50	0 -75	0 -100	0 -125
Variation	V_{dp}	6	8	9	11	15	19	23	26	30	34	38			
Thickness variation	S_i *)	3	3	3	4	4	5	5	7	7	9	11	13	15	18

*) The values for thickness variation S_i of shaft washers also apply to housing washers

Tolerances for NKE thrust bearings

Housing washer

All dimensions shown in **[mm]**
Tolerances in **[µm]**

Nominal outer diameter	over	-	30	50	80	120	180	250	315	400	500	630	800	1000	1250
	incl.	**30**	**50**	**80**	**120**	**180**	**250**	**315**	**400**	**500**	**630**	**800**	**1000**	**1250**	**1600**

Tolerance class PN (normal)

Deviation	Δ_{Dmp}	0 -13	0 -16	0 -19	0 -22	0 -25	0 -30	0 -35	0 -40	0 -45	0 -50	0 -75	0 -100	0 -125	0 -160
Variation	V_{Dp}	10	12	14	17	19	23	26	30	34	38	55	75		
Seating washer Deviation	Δ_{Du}	0 -30	0 -35	0 -45	0 -60	0 -75	0 -90	0 -105	0 -120	0 -135	0 -180				

Tolerance class P6

Deviation	Δ_{Dmp}	0 -13	0 -16	0 -19	0 -22	0 -25	0 -30	0 -35	0 -40	0 -45	0 -50	0 -75	0 -100	0 -125	0 -160
Variation	V_{Dp}	10	12	14	17	19	23	26	30	34	38	55	75		

Tolerance class P5

Deviation	Δ_{Dmp}	0 -13	0 -16	0 -19	0 -22	0 -25	0 -30	0 -35	0 -40	0 -45	0 -50	0 -75	0 -100	0 -125	0 -160
Variation	V_{Dp}	10	12	14	17	19	23	26	30	34	38	55	75		

Tolerances for bearing heights of NKE thrust bearings

Values apply to tolerance classes PN (normal), P6, P5

All dimensions shown in **[mm]**
Tolerances in **[µm]**

Nominal bore diameter	over / incl.	- 30	30 50	50 80	80 120	120 180	180 250	250 315	315 400	400 500	500 630	630 800	800 1000	1000 1250
Deviation	Δ_{Hs}	+20 -250	+20 -250	+20 -300	+25 -300	+25 -400	+30 -400	+40 -400	+40 -500	+50 -500	+60 -600	+70 -750	+80 -1000	+100 -1400
	Δ_{H1s}	+100 -250	+100 -250	+100 -300	+150 -300	+150 -400	+150 -400	+200 -400	+200 -500	+300 -500	+350 -600	+400 -750	+450 -1000	+500 -1400
	Δ_{H2s}	+150 -400	+150 -400	+150 -500	+200 -500	+200 -600	+250 -600	+350 -700	+350 -700	+400 -900	+500 -1100	+600 -1300	+700 -1500	+900 -1800
	Δ_{H3s}	+300 -400	+300 -400	+300 -500	+400 -500	+400 -600	+500 -600	+600 -700	+600 -700	+750 -900	+900 -1100	+1100 -1300	+1300 -1500	+1600 -1800
	Δ_{H4s}	+20 -300	+20 -300	+20 -400	+25 -400	+25 -500	+30 -500	+40 -700	+40 -700	+50 -900	+60 -1200	+70 -1400	+80 -1800	+100 -2400

See fig. 5.1:

a) Thrust ball bearing, single direction

b) Thrust ball bearing, single direction with spheroid housing washer and seating washer

c) Thrust ball bearing, double direction, with centre washer

d) Thrust ball bearing, double direction with spheroid housing washers, seating washers and centre washer

e) Cylindrical roller thrust bearing, single direction

f) Cylindrical roller thrust bearing, double direction

g) Spherical roller thrust bearing

Bearing heights of NKE thrust bearings

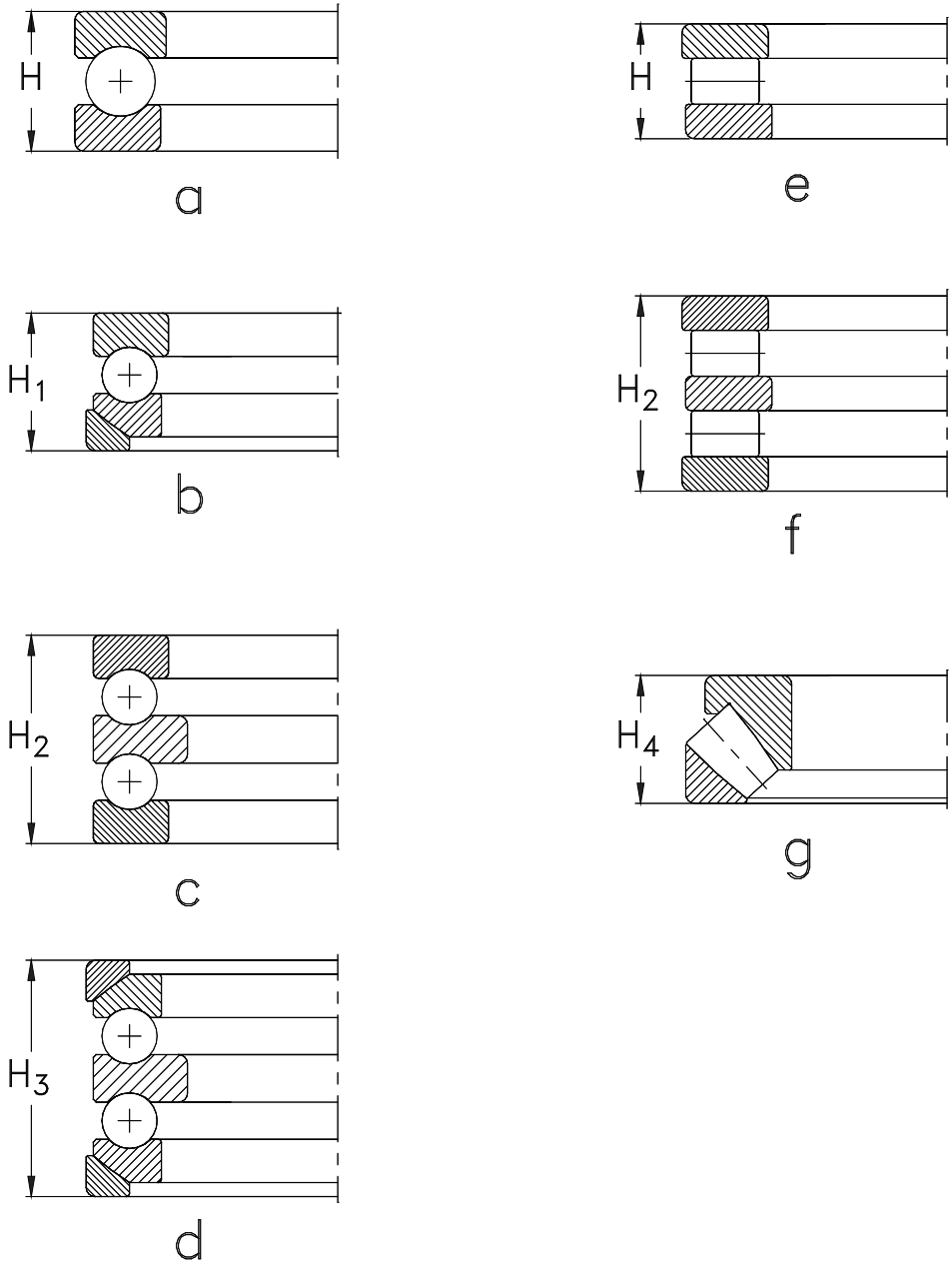

Fig. 5.1

Tolerances for tapered bearing bores

For definitions (see fig.5.2)

Tapered bore, taper 1:12

Half angle of taper 1:12: α = 2°23‘9,4“
Theoretical large diameter d1 for taper 1:12

$$d_1 = d + \frac{B}{12}$$

(Eq. 5.1)

Values for tolerance classes PN (normal) and P6

All dimensions shown in **[mm]**
Tolerances in **[µm]**

Nominal bore diameter [mm]	over / incl.	18 / 30	30 / 50	50 / 80	80 / 120	120 / 180	180 / 250	250 / 315	315 / 400	400 / 500	500 / 630	630 / 800	800 / 1000	1000 / 1250
Deviation	Δ_{dmp}	+21	+25	+30	+35	+40	+46	+52	+57	+63	+70	+80	+90	+105
		0	0	0	0	0	0	0	0	0	0	0	0	0
Deviation	$\Delta_{d1mp} - \Delta_{dmp}$	+21	+25	+30	+35	+40	+46	+52	+57	+63	+70	+80	+90	+105
		0	0	0	0	0	0	0	0	0	0	0	0	0
Deviation	V_{dp}	13	15	19	25	31	38	44	50	56	-	-	-	-
		13	15	19	25	31	38	44	50	56	-	-	-	-

Tapered bore, taper 1:30

Half angle of taper 1:30 α = 0°57‘17,4“

Theoretical large diameter d_1 for taper 1:30

$$d_1 = d + \frac{B}{30}$$

(Eq. 5.2)

Values for tolerance classes PN (normal)

All dimensions shown in **[mm]**
Tolerances in **[µm]**

Nominal bore diameter [mm]	over / incl.	50 / 80	80 / 120	120 / 180	180 / 250	250 / 315	315 / 400	400 / 500	500 / 630	630 / 800	800 / 1000	1000 / 1250
Deviation	Δ_{dmp}	+15	+20	+25	+30	+35	+40	+45	+50	+75	+100	+125
		0	0	0	0	0	0	0	0	0	0	0
Deviation	$\Delta_{d1mp} - \Delta_{dmp}$	+35	+40	+50	+55	+60	+65	+75	+85	+100	+100	+125
		0	0	0	0	0	0	0	0	0	0	0
Deviation	V_{dp}	19	25	31	38	44	50	56	63	-	-	-
		19	25	31	38	44	50	56	63	-	-	-

Tolerances for tapered bearing bores

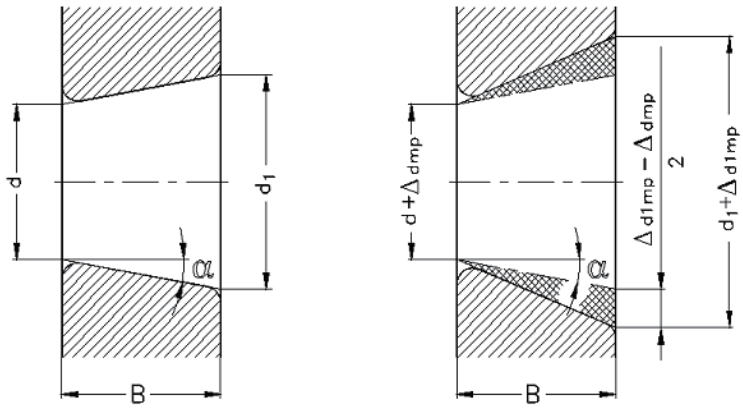

Fig. 5.2

See above fig. 5.2:

d	theoretical small diameter
d_1	theoretical large diameter
α	half angle of taper
B	bearing width
Δ_{dmp}	deviation of mean bore diameter from nominal
Δ_{d1mp}	deviation of mean large diameter from nominal at tapered

General

Rolling element bearings are machine elements that satisfy key functions in rotating machines. They transmit forces, moments and rotating motions and guide axles, shafts and machine tool spindles.

The bearing selection has to be made carefully in terms of high reliability, balanced life expectations and economics.

This is why prior to making a bearing determination and calculating its fatigue life for a given application, it is necessary to determine all the important input data and parameters for the specific application.

In many cases experience with common or similar applications and bearing arrangements is available and is a useful guide.

For new applications it is recommended to collect all operational requirements and details and make use of NKE application engineering services.

Basic Considerations

In order to design the optimum bearing arrangement, both technically and economically, the following general aspects have to be considered.

- type of expected loads and moments to select adequate bearing type.
- magnitude and characteristic of the most important parameters that determine the bearing's function and its life.
- interdependence of bearing type, applied loads, operating conditions, maintenance and bearing life expectations.
- impact of professional mounting and lubrication on the flawless function of a rolling bearing.

Detailed Considerations

Size and direction of applied loads

This information is usually stated within the specific machine or application performance data. The initial step for selecting a bearing type is not the load magnitude, but the direction and characteristic of applied loads.

- Is a thrust bearing needed additionally or will a radial bearing fulfil the requirements?
- Is the bearing operated under dynamic load or stationary load only?
- Is the applied force a pure radial or pure thrust load? Or is it a combination of both? If yes what is the ratio of radial to thrust load.
- Does the direction of load change?
- Will vibrations or even shock loads occur?

Available space

At this stage of bearing selection usually the main data of the machine such as shaft diameter, housing dimensions, space etc. have already been set. Thus the available space to accommodate the bearing arrangement within the machine is often determined and is a limiting factor in bearing size selection.

Rigidity, misalignments

- Will misalignments occur due to variations of shaft, housing, manufacturing tolerances, etc.?
- Will deformation of the housing and / or shaft occur under load?
- Does the bearing arrangement require certain rigidity?

Arrangement of shaft and bearing position

- Are the shafts that have to be supported arranged in vertical or horizontal direction?
- Based on the load applied to the bearing what are the necessary shaft and housing fits?

- Where should the locating and the non-locating bearing be positioned?

- Does the proposed bearing arrangement require adjustment or preloading?

Bearing life expectation

- What bearing life is requested by customer?
- What bearing life is realistically reasonable and cost effective?
- Which comparisons can be made with the experience and knowledge of well operating existing applications?

Precision, running accuracy, running noise

- Is there any requirement for specific running accuracy or low noise levels for certain applications (e.g. household appliances, fans, electric motors, etc.)?
- Will precision guidance of the shaft be necessary?
- Will the bearing arrangement require a reduced starting torque?

Environmental effects

- Is the application affected by negative environmental influences (e.g. abrasive materials, sand, dust, water or corrosive media)?
- Is there any additional heat source, adjacent to the bearing arrangement?
- How can the heat dissipation be assured? Is a cooling device installed?
- Will the bearing arrangement operate at normal or extremes temperature?

Lubrication, mounting and maintenance

- What type of lubrication is projected?
- Are other lubricating means available within the machine that may be used to lubricate the bearings?
- Will the bearing require a special lubrication (minimum lubrication, oil mist lubrication) etc.?
- Is additional heat dissipation required?
- How will the lubrication system be designed, how should lubrication slots, oil pipes, relubricating vents, etc. be arranged?
- Is the bearing position sealed?
- In which manner may the bearings be mounted in a quick, reliable and economic way?
- How much time is needed for adjusting the bearings? It may be reasonable in some cases to select pre-adjusted bearing arrangements.
- Will it be more economic to mount the bearings using adapter sleeves or even withdrawal sleeves to reduce expensive machining of bearing seats?
- How will the bearing be dismounted or replaced in a quick and economic way? What design features may ease the maintenance of bearings?
- Where will the bearing relubrication points be located for easy access and service?
- What practical and economic design features and arrangements facilitate bearing monitoring and inspection?

Economic effects

Design engineers have to bear in mind the economic aspects of their activities, too.

In general the standard catalogue program of rolling bearing manufacturers should be preferred. This ensures an excellent availability and price level because of mass production volumes. Such standard bearings are proven in the vast majority of applications.

Non-standard bearings should only be used in very special cases, where standard bearings cannot fulfil the requirements sufficiently.

When requiring special bearings, it has to be considered that they are usually produced according to customer's order only, and consequently have longer lead times and restricted availability.

Therefore the following questions should also be answered:

- Is a standard bearing or a variation of a standard bearing able to fulfil the requirements in this application?
- Can one of the ready-to-mount plummer block or flanged housing units be used?
- How wide-spread is the bearing you have selected?
- What is the demand of bearings or accessories?
- When should the delivery commence?
- What delivery time has to be taken into consideration?
- What is the long term availability of the selected bearing or the lubricant?
- Will the designated bearing be available in the aftermarket as a OEM customer part number or through general resale distributor outlets?

Selection of Bearing Type

At this initial stage of bearing selection the specific characteristics of different bearing types are described in detail in the bearing tables provided.

Table 6.1 lists some of the main characteristics of the most important bearing types.

Explanation of the symbols used in table 6.1:

+++ highly suitable
++ adequately suitable
+ fairly suitable
a depending upon the particular bearing design (for more detailed information please consult the particular product tables)
→ in one direction
↔ in both directions

The table 6.1 is for **basic guidance only**. Therefore for each application the selected bearing type and size or arrangement must be checked and approved for suitability. Additionally at this stage and where applicable, the relative positions for the locating and the non-locating bearings should already be determined.

Bearing type	radial loads	axial loads	combined loading	tilting moments	speed	mis-alignment
Single row deep groove ball bearings	+	+ ↔	+ ↔		+++	+ a
Double row deep groove ball bearings	+	+ a ↔	+ ↔	+	+	
Single row angular contact ball bearings	+	++ →	+ →		+++	
Paired angular contact ball bearings	++	++ a ↔	++ a ↔	++ a	++	
Double row angular contact ball bearings	++	++ a ↔	++ ↔	++	++	
Four-point contact ball bearings		++ ↔	+ ↔	++	++	
Self aligning ball bearings	+				++	+++
Single row cylindrical roller bearings	++		+ a		++	
Spherical roller bearings	+++	+ ↔	++ ↔		+	+++
Single row tapered roller bearings	++	++ →	+++ →		+	
Single row tapered roller bearings, paired	+++	++ ↔ a	+++ ↔ a	++ a	+	
Thrust ball bearings		+ a				
Cylindrical or needle roller thrust bearings		++ a				
Spherical roller thrust bearings		+++	+ →			+++
Full complement cylindrical roller bearings	+++		+ a			

Table 6.1

Load Ratings and Bearing Life

Each bearing application is affected by several influencing parameters during operation.

That is why one has to distinguish between different terms which determine the fitness of a bearing.

These terms are defined as follows:

Static load calculation

- is the calculation to investigate the impact of the maximum contact pressure on a stationary, oscillating or very slow rotating bearing without permanent damage to raceway or rolling elements by residual plastic deformation.

Dynamic load calculation

- is a statistical value based on the fatigue life of the bearing materials.

Service life

- is a term which tries to describe the overall life of the bearing in its application and may differ from application to application, even for the same fatigue life.

For example, the service life of a machine that is fitted with sealed deep groove ball bearings may be far below the theoretical life rating of the bearings, because the grease fill within the bearings may have a shorter life, when compared to the life ratings of the bearings.

Thus the extended life calculation has to be applied taking into account environmental impacts such as lubrication and cleanliness (see page 267).

The service life of a bearing is additionally altered by additional influences which are hardly computable, e.g.

- wear,
- misalignment,
- deviating operational conditions,
- inadequate operational clearance,
- vibrations, detoriation during mounting and transport, grease degrading.

Static Load Rating

Rolling element bearings are able to accommodate high loads that will be transmitted via very small areas between the rolling elements and the bearing rings.

Thus in the contacting areas very high pressure, the so-called **Hertzian pressure**, occurs.

This pressure may cause some deformation on the contacting bearing parts.

Up to a certain limit the deformations lie within the elastic range which means that if the pressure is removed the parts spring back to their initial shape.

If the forces are too high, a plastic deformation may remain.

Extended tests and practical experiences have proven that a remaining deformation of less than .0001 (**0.01%**) of the respective rolling element diameter will not have a negative impact on the performance of a bearing.

Subsequently the standardized **static load rating** of a bearing, as defined in the ISO 76:2009 indicates the magnitudeof load which will generate this residual deformation in the contact zone of the top loaded rolling element and the adjacent raceway.

The corresponding values of the **Hertzian pressure** have been calculated for the different bearing types:

for self aligning ball bearings:	**4600** MPa
for ball bearings in general:	**4200** MPa
for roller bearings:	**4000** MPa

(1 MPA = 1N/mm²)

Values of static load ratings (**C_{0r}** for **radial bearings** and **C_{0a}** for **thrust bearings**) are listed in the product tables.

Calculating Rolling Bearings at Static Loads

The **static load safety margin** (**S_0**) has been checked. This is the ratio of the **static load** acting upon the bearing and the **static load rating** of the bearing.

When radial bearings are exposed to pure radial load, or thrust bearings are exposed to pure axial loads the **static load safety** margin (**S_0**) is calculated by the following formula:

$$S_0 = \frac{C_0}{P_0}$$

(Eq. 6.1)

where

S_0 = static load safety margin
C_0 = static load rating [kN]
C_{0r} for radial bearings,
C_{0a} for thrust bearings
P_0 = maximum static equivalent load applied [kN]

For recommended values of static load safety margins see **table 6.2**.

Static Equivalent Load P_0

If a bearing is exposed to combined loads (radial and axial loads simultaneously) these forces have to be converted into an imaginary load that would generate the same deformation in the bearing as the actual forces. This imaginary load is called the **static equivalent load** (**P_0**).

where:

$$P_0 = X_0 * F_r + Y_0 * F_a$$

(Eq. 6.2)

or:

$$P_0 = F_r$$

(Eq. 6.3)

The **greater** of these two values must be used as (**P_0**) for checking the static carrying safety.

where

P_0 = static equivalent load [kN]
X_0 = static radial factor (given in product tables)
Fr = radial load on bearing [kN]
Y_0 = static axial factor (given in product tables)
F_a = axial load [kN]

Recommended Values for the Static Load Safety Margin

Required running accuracy	Recommended values for S_0	
	ball bearings	roller bearings
High	≥ 2	≥ 3
Normal	≥ 1	≥ 1,5
Low	≥ 0,5	≥ 1

Table 6.2

Exceptions:

For the following bearing types the minimum values for static load safety margins must be higher for specific reasons:

Spherical roller thrust bearings: **S_{0min}** ≥ 4

Dynamic Rating Life

The bearing rating life calculation is based on the bearing **steel fatigue mechanism**.

Such fatigue of bearing material is a natural phenomenon depending upon both the stresses caused by the induced tumescent loads and the cleanliness of the material being used for the bearing rings. These cyclic load stresses generated by the frequently overrolling of the raceways by the rolling elements will finally cause micro cracks within the bearing steel and subsequently they can be observed as spalling in the raceways.

This natural process follows statistical theories making this phenomenon predictable and even calculable.

For calculating the dynamic rating life of a bearing the **dynamic load ratings** listed in the product tables must be used.

The calculation of the dynamic load rating of a bearing is done in accordance with the international standard DIN ISO 281:2009.

Dynamic Load Ratings C_r or C_a

This reference value is defined in DIN ISO 281 as an in its magnitude and direction constantly acting radial load, when applied to radial bearings, or axial and central load, when applied to thrust bearings, thus providing a nominal bearing life of 10^6 revolutions (i.e. one million revolutions) before material fatigue happens.

Nominal Rating Life L_{10}

This is defined as the life expectancy reached by **90%** of the same bearing group subjected to equal operating conditions prior to the occurance of material fatigue.

The definition is based on collective data over several years and forms the basis of acceptable reliable engineering design practice.

It is well proven that the majority of bearings exceed their calculated rating life successfully; in fact 50% of bearings exceed the calculated nominal rating life by a factor of up to 5 times.

Calculation of Dynamic Loaded Bearings

For a calculation of the nominal bearing rating life L10 in terms of millions of revolutions the formula below must be applied:

$$L_{10} = \left(\frac{C}{P}\right)^p \qquad \text{(Eq. 6.4)}$$

where

p	=	life exponent	
		for ball bearings:	**p = 3**
		for roller bearings:	**p = 10/3**
$\mathbf{L_{10}}$	=	nominal rating life	[10^6 U]
C	=	dynamic load rating	[kN]
		$\mathbf{C_r}$ for radial bearings,	
		$\mathbf{C_a}$ for thrust bearings	
P	=	dynamic equivalent load [kN]	

If stating the nominal **rating life L_{10h}** in terms of **operating hours**, the formula below must be applied:

$$L_{10h} = \frac{\left(\frac{C}{P}\right)^p * 10^6}{60 * n} \qquad \text{(Eq. 6.5)}$$

where

p	=	life exponent	
		for ball bearings:	**p = 3**
		for roller bearings:	**p = 10/3**
$\mathbf{L_{10h}}$	=	nominal rating life	**[h]**
C	=	dynamic load rating	[kN]
		$\mathbf{C_r}$ for radial bearings,	
		$\mathbf{C_a}$ for thrust bearings	
P	=	dynamic equivalent load [kN]	
n	=	operating speed [min^{-1}]	

Recommended values for nominal rating life L_{10H} are listed in **table 6.3**.

Application	L10h [h]	Remarks
Elevators, lifts	10,000 ÷ 15,000	high reliability required
Construction equipment	2,000 ÷ 8,000	often running in harsh environment
Crusher, mills	20,000 ÷ 40,000	frequent shock loads
Electric motors		
Small electric motors, e.g. for household equipment	2,000 ÷ 5,000	very quiet running noise requirement
Industrial motors	30,000 ÷ 70,000	
Large motors	50,000 ÷ 100,000	
Household machines	500 ÷ 2,000	short-term operation
Motor tools	3,000 ÷ 10,000	short-term operation
Woodworking machines	3,000 ÷ 10,000	usually high speeds
Conveyors		
Conveyors, general	15,000 ÷ 20,000	often running in harsh environment
Conveyor belt rollers	15,000 ÷ 100,000	
Gear boxes		
Industrial gear boxes	5,000 ÷ 20,000	high reliability is usually required
Large gear boxes	40,000 ÷ 100,000	
Railway axle gearboxes	20,000 ÷ 75,000	
Compressors	5,000 ÷ 30,000	
Power plants	80,000 .. 200,000	high reliability required
Agricultural equipment		
Tractors	4,000 ÷ 8,000	often running in harsh environment
General agricultural equipment	1,000 ÷ 2,000	often long inactive or stationary periods
Paper mills	75,000 ÷ 150,000	high reliability required
Presses	10,000 ÷ 50,000	
Pumps		
Circular pumps	20,000 ÷ 80,000	
Piston pumps	1,000 ÷ 10,000	
Gear pumps	1,000 ÷ 10,000	
Shaker screens	10,000 ÷ 20,000	special bearing design requirements
Out-of-balance motors	2,500 ÷ 7,500	special bearing design requirements
Fans	20,000 ÷ 100,000	sometimes high reliability required
Steel mills	10,000 ÷ 50,000	bearings often being exposed to humidity, shock loads, dirt etc.
Machine tools	10,000 ÷ 50,000	high accuracy required
Centrifuges	10,000 ÷ 20,000	high accelerations

Table 6.3

If the nominal **rating life L_{10S}** is stated in terms of **running kilometres** the formula below must be applied:

$$L_{10S} = \left(\frac{C}{P}\right)^p * \pi * D \qquad \text{(Eq. 6.6)}$$

where

p	=	life exponent for ball bearings: **p = 3** for roller bearings: **p = 10/3**
L_{10S}	=	nominal rating life [km]
C	=	dynamic load rating [kN] **C_r** for radial bearings **C_a** for thrust bearings
P	=	dynamic equivalent load [kN]
D	=	wheel diameter [mm]

Please find in **table 6.4 below** typical recommendations regarding nominal bearing life **L_{10S}** requirements:

Axle box bearings of railway vehicles	
Freight cars	800,000 ÷ 1,000,000
Underground	1,000,000
Trams	1.500,000
Locomotives	3,000,000 ÷ 5,000,000
Personal wagons	3,000,000
Railcars	3,000,000 ÷ 4,000,000

Table 6.4

The above listed examples are for reference **only**.

Practical values may differ considerably.

Dynamic equivalent load P

The formulas for the calculation of the dynamic bearing life as previously stated, anticipate a load of uniform magnitude and direction that acts radially only (for radial bearings) or axially and centrally (for thrust bearings.)

In case of bearings that are exposed to **combined dynamic loads** the single load components have to be transferred into an imaginary load which affects the bearings in the same way as the actual forces.

This imaginary load is called **dynamic equivalent load P**.

P is calculated in the following manner:

$$P = X * F_r + Y * F_a \qquad \text{(Eq. 6.7)}$$

where

P	=	dynamic equivalent load [kN]
X	=	dynamic radial factor (given in product tables)
F_r	=	radial bearing load [kN]
Y	=	dynamic axial factor (given in product tables)
F_a	=	axial load [kN]

Limiting load ratio e

When calculating the dynamic equivalent load **P** for a single row radial bearing, axial loading of less than the limiting load ratio **e** can be neglected.

This applies to thrust bearings that may accommodate radial loading, too. An example of such a bearing is a spherical roller thrust bearing.

In case of **double row radial bearings**, however, even small axial loads have to be considered.

The value of this **limiting load ratio e** depends on the specific suitability of a certain bearing type to take up combined loads.

For more detailed information on the ability of each single bearing type see product tables.

Determination of Operating Load

To obtain a reliable result when calculating the bearing life all forces acting on the bearing must be identified and included in the calculations.

The weight forces derived from the mass of the shaft and its adjacent parts should be known, including the forces generated by the input and output power and gear transmissions.

Some dynamic forces especially shock loads or vibrations, usually cannot be determined precisely.

The magnitude and direction of load, including the operating speed may vary during operation, too.
A valuable contribution to estimate the loads is practical experience with comparable applications.

Below factors can be applied:

$$P_{eff} = Pnom * f_s * f_z \qquad \text{(Eq. 6.8)}$$

where

P_{eff}	=	effective dynamic load acting on bearing [kN]
P_{nom}	=	nominal load on bearing [kN]
f_s	=	shock factors (see table 6.5)
f_z	=	additional factors for dynamic bearing load (see table 6.6)

Shock factor f_s:

In many applications shock loads or vibrations may occur in addition to the known calculated forces.

Such additional loads have to be considered by using a **shock factor f_s**.

The movable masses in a machine are to be multiplied by the shock factors listed in table 6.5:

Shock loads	Application examples	Shock factor f_s
little shock loads	electric motors generator machine tools pumps	**1.0 ÷ 1.2**
normal shocks	fans conveyors general machinery	**1.2 ÷ 1.5**
heavy or frequent shocks	crusher shaker screens mills rolling stands	**1.5 ÷ 3.0**

Table 6.5

Gear factor f_z:

Gear drives and gearboxes create additional forces generated by pitch errors of the gears and/ or by manufacturing tolerances and geometric inaccuracies.

Out of balance forces of gears and shafts also create additional loads.

Such forces will increase the load on the bearings and thus must be considered when calculating the bearing life using the **gear factor f_z**.

Values of gear factor **f_z** for reference are listed in table 6.6.

Accuracy of gear	Gear factor f_z
high precision gears pitch and form errors less than .02 mm	**1.05 ÷ 1.1**
standard accuracy pitch and form errors between .02 and .1 mm	**1.1 ÷ 1.3**

Table 6.6

Additional Forces of Chain and Belt Drives

Chain and belt drives create additional forces that must be considered for bearing dimensioning.

Belt drives always run under preload to enable the transmission of forces. This invariably causes vibrations.

In case of **chain drives** vibrations and shock loads occur frequently.

Some empirical values for consideration of these additional forces are listed in table 6.7 by applying the factor f_z.

Type of drive	Factor f_z
Chain drives	**1.1 ÷ 1.5**
Belt drives	
V-belt	**1.5 ÷ 2.5**
Toothed belt	**1.1 ÷ 1.5**
Flat belt	**3 ÷ 4**
Flat belt with pulley	**2.5 ÷ 3**

Table 6.7

Calculation of Bearing Load and Speed under Variable Operating Conditions

It is the exception that machines operate at uniform load and constant speed all the time.

Normally the magnitude of load, forces, and the rotational speed vary during operation.

However, more often the parameters follow a certain pattern, such as during a CNC machine production cycle, when this cycle loading and speed change is repetitive. In some cases load patterns are defined by customer requirements and as such included within the bearing design arrangement.

To determine a realistic magnitude for the estimation of bearing life the variable loads and speeds have to be transferred into an imaginary (fictitious) constantly acting **mean load F_m** and respectively a uniform **mean speed n_m**.

Depending upon the individual conditions or the load or speed pattern the **mean load F_m** and the **mean speed n_m** may be calculated according to the formula shown on page 288 Ep. 6.9 and Ep. 6.10, respectively.

Rectangular Course (fig. 6.1):

A typical load and speed pattern for power transmissions, e.g. in a mechanical gear box is represented by a staircase input of load and/or speed.

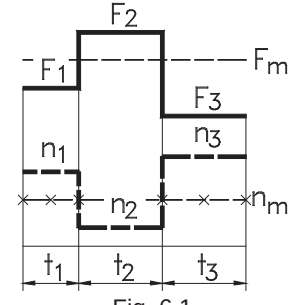

Fig. 6.1

To calculate the **mean load** as in fig. 6.1., the formula **Eq. 6.9 shall be** applied.

$$F_m = \left[\frac{\Sigma \left(F_i^{\,p} * n_i * t_i \right)}{\Sigma \left(n_i * t_i \right)} \right]^{1/p} \qquad \text{(Eq. 6.9)}$$

where

$\mathbf{F_m}$	=	mean load	[kN]
$\mathbf{F_i}$	=	load during time period i	[kN]
$\mathbf{n_i}$	=	speed during time period i	[rpm]
$\mathbf{t_i}$	=	duration of time period i. The duration can be calculated as a percentage of the total duration of load cycle	
p	=	life exponent	
		for ball bearings:	**p = 3**
		for roller bearings:	**p = 10/3**

At constant load the **mean speed** is calculated according to formula **Eq. 6.10**:

$$n_m = \frac{\Sigma \left(n_i * t_i \right)}{\Sigma t_i} \qquad \text{(Eq. 6.10)}$$

Periodic Linear Load Changes

For conveyor applications there may be changes in linear loading during the operational time at constant speed (fig. 6.2).

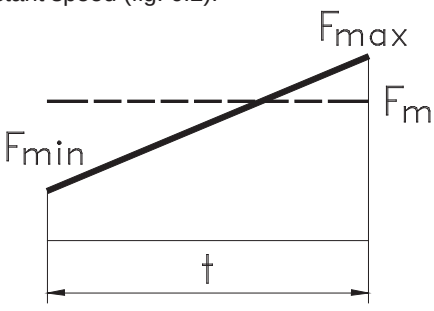

Fig. 6.2

The mean load on the bearing $\mathbf{F_m}$ may be evaluated with sufficient accuracy using formula Eq. 6.11:

$$F_m = \frac{F_{min} + 2 * F_{max}}{3} \qquad \text{(Eq. 6.11)}$$

where

$\mathbf{F_m}$	=	mean load	[kN]
$\mathbf{F_{min}}$	=	minimum load	[kN]
$\mathbf{F_{max}}$	=	maximum load	[kN]

Sinusoidal Load Pattern:

The changes in magnitude of load correspond in its course to a sine wave-form.

Two main load patterns have to be distinguished:

a) the magnitude of load returns to zero and peaks in the next phase again (fig. 6.3).

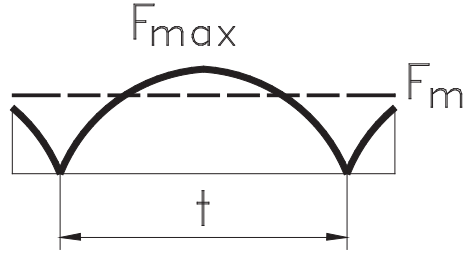

Fig. 6.3

At constant speed the mean load $\mathbf{F_m}$ may be calculated roughly according to the following formula:

$$F_m = 0{,}75 * F_{max} \qquad \text{(Eq. 6.12)}$$

b) The load changes its magnitude in a sine wave-form course between two extreme values (fig. 6.4).

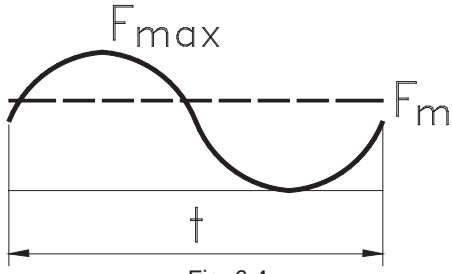

Fig. 6.4

At constant speed the mean load F_m can be calculated with sufficient accuracy by the following formula:

$$F_m = 0{,}65 * F_{max}$$

(Eq. 6.13)

Calculation of Bearing Load for Paired Tapered Roller Bearings and Angular Contact Ball Bearings

Angular contact ball bearings and tapered roller bearings transmit loads through their inclined raceways with a specific contact angle **α** towards the shaft axis (fig. 6.5).

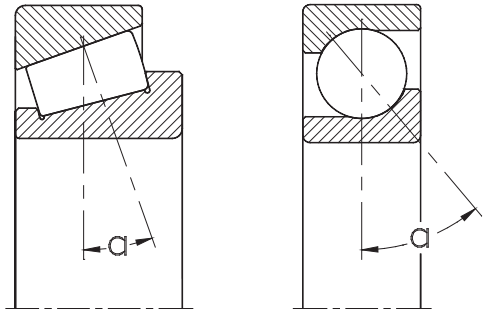

Fig. 6.5

In this way each external applied load, even pure radial load, generates an internal force that converts into an external thrust force towards the opposite bearing (fig. 6.6).

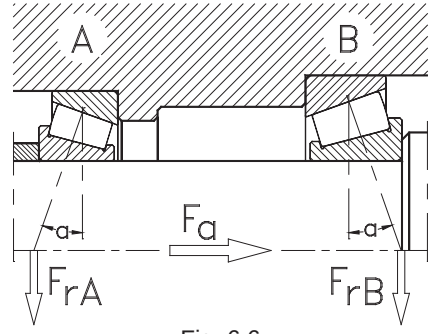

Fig. 6.6

This induced axial force has only to be considered when it exceeds the **limiting load ratio e**. The bearing that generates the smaller thrust load has to be observed.

For more detailed information see the product chapter and tables.

Calculation of Nominal Rating Life of Oscillating Bearings

Where bearings do not rotate, but have some oscillating movements only (fig. 6.7),

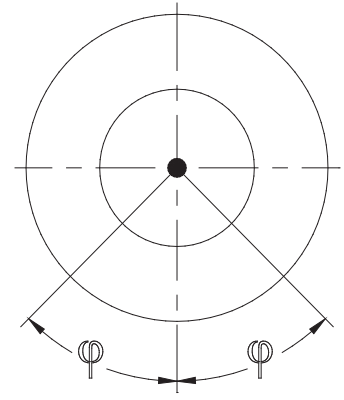

Fig. 6.7

the calculation of nominal life rating is according to the formula below:

$$L_{10\,osc} = \frac{\left(\frac{C}{P}\right)^p * 180}{2 * \varphi}$$

(Eq. 6.14)

where

p	=	Life exponent
		for ball bearings: **p = 3**
		for roller bearings **p = 10/3**
$\mathbf{L_{10osc}}$	=	nominal rating life for oscillating movement [10^6 movements]
C	=	dynamic load rating [kN]
		$\mathbf{C_r}$ for radial bearings,
		$\mathbf{C_a}$ for thrust bearings
P	=	equivalent bearing load [kN]
ϑ	=	half oscillating amplitude [°]

Modified Rating Life

A comparison between the calculated nominal rating life values and the actual experienced bearing life times differ significantly.

This has brought the bearing manufacturers to advance calculation methods that got standardized as **extended rating life calculation** by latest DIN ISO 281:2009.

The extended rating life calculation considers and evaluates the influences of material quality and operating conditions.

These influences are as follows:

- **reliability,**
- **lubrication condition,**
- **contamination,**
- **bearing material strength.**

The formula to be used for calculating the extended **rating life L_{nm}** is:

$$L_{nm} = a_1 * a_{iso} * L_{10}$$

(Eq. 6.15)

or

$$L_{nm} = a_1 * a_{ISO} * \left(\frac{C}{P}\right)^p$$

(Eq. 6.16)

where

$\mathbf{L_{nma}}$	=	extended rating life [10^6 rev]
$\mathbf{a_1}$	=	factor for reliability
$\mathbf{a_{ISO}}$	=	factor for combined consideration of lubrication, bearing material, contamination

Factor for Reliability a_1

The nominal rating life calculation as per standardised method (see formula Eq. 6.4) assumes a **reliability** of **90%**.

This means that within a group of identical bearings operating under the same running conditions 10 % may fail theoretically by reasons of material fatigue and will not attaintheir calculated rating life.

Practical experiences, however, have proven that more than half of these bearings exceed the life expectations by up to 5 times of the rating life.

For general machinery applications 90% reliability may be acceptable; other cases may require higher reliability with subsequent higher safety. This can be achieved using the reliability factors a, listed in table 6.8.

Reliability [%]	L_{nm}	Factor a_1
90	L_{10m}	1.00
95	L_{5m}	0.64
96	L_{4m}	0.50
97	L_{3m}	0.47
98	L_{2m}	0.37
99	L_{1m}	0.25

Table 6.8

It can be clearly observed that in order to achieve 99% reliability (**L_{1m}**), the rating life value will be reduced to ¼ of the standard rating life calculated at 90% reliability (**L_{10m}**).

Factor a_{ISO} for System Consideration of Lubrication, Contamination, Bearing Material

If lubrication conditions, cleanliness and other operating conditions are favourable, NKE bearings made of high grade steels and high manufacturing quality can reach an infinite life when exposed below a certain load level. Usually the bearing material's limiting tensile strength is reached when the contact pressure of the top loaded rolling element levels at some 1,500 MPa. The corresponding bearing limit load Cu is defined by the type of bearing, the internal bearing design, the profile of the rolling elements and material and is shown in the product tables.

If the lubrication gap between rolling element and raceway is contaminated by solid particles residual indentations act as bearing life consuming stress raisers.

Table 6.9 gives good practical indications.

Grade of Contamination	e_c for d_m < 100 mm	e_c for d_m ≥ 100 mm
extreme cleanliness	1	1
high cleanliness	0,8 to 0,6	0,9 to 0,8
normal cleanliness	0,6 to 0,5	0,8 to 0,6
light contamination	0,5 to 0,3	0,6 to 0,4
medium contamination	0,3 to 0,1	0,4 to 0,2
severe contamination	0,1 to 0	0,1 to 0
extremely severe contamination	0	0

Table 6.9

e_c = contamination factor

One of the most important requirements for a satisfactory function of a rolling bearing is the proper lubrication selection. The main task of the lubricant in a bearing is to separate the metallic bearing parts from each other (fig. 6.8).

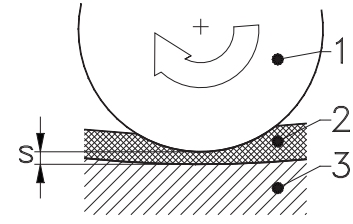

Fig. 6.8

The standard formula for calculating the **nominal** rating life (see formula Eq. 6.4) assumes a good, clean lubricant that provides a sufficient separation of the bearing parts.

Such a separation will be achieved only when the **lubrication layer** (**2**) builds up between the **bearing rings** (**3**) and the **rolling elements** (**1**) to separate the adjacent surfaces.

Therefore the lubrication layer must have a **thickness** (**s**) greater than the sum of both the surface roughnesses.

Additionally, no other solid particles or impurities may contaminate the lubricant.

The build up of a lubrication layer in a bearing is basically dependant on the lubricant's consistency during operation, this is termed **operating viscosity**.

The term **kinematic viscosity** is defined as the extent to which a fluid resists the tendency to flow. It is one of the most significant characteristics of lubricating oil. For grease lubricants the base oil viscosity will be stated.

For further information (see page **330**).

Temperature affects the oil viscosity; subsequently, viscosity values are relative to individual temperatures. The kinematic viscosity (ν_{40}) therefore refers to an ambient temperature of 40 °C (104°F).

The required minimum viscosity of a lubricant during operation depends on the following factors:

- **bearing size**
- **operating temperature**
- **rotational speed**

A simple and generally accurate estimate of the influences of lubrication on the rated bearing life is possible using the following diagrams and instruction steps:

1) **Calculation of bearing mean diameter d_m**
2) **Estimation of (required) rated viscosity ν_1**
3) **Determination of (actual) operating viscosity ν**
4) **Building of the ratio of rated to operating viscosity κ**
5) **Determination of factor a_{ISO}.**

These steps are specified on the following pages.

Example

Determine the viscosity ratio κ for a deep groove ball bearing type **6210** (bore ∅ 50 mm, outer ∅ 90 mm)

Operating conditions:	Speed	**n**	=	1000 rpm
	Operating temperature	$\mathbf{t_{max}}$	=	70°C (158°F)
Grease lubrication is planned, kinematic viscosity		ν_{40}	=	68 mm² / s, normal cleanliness

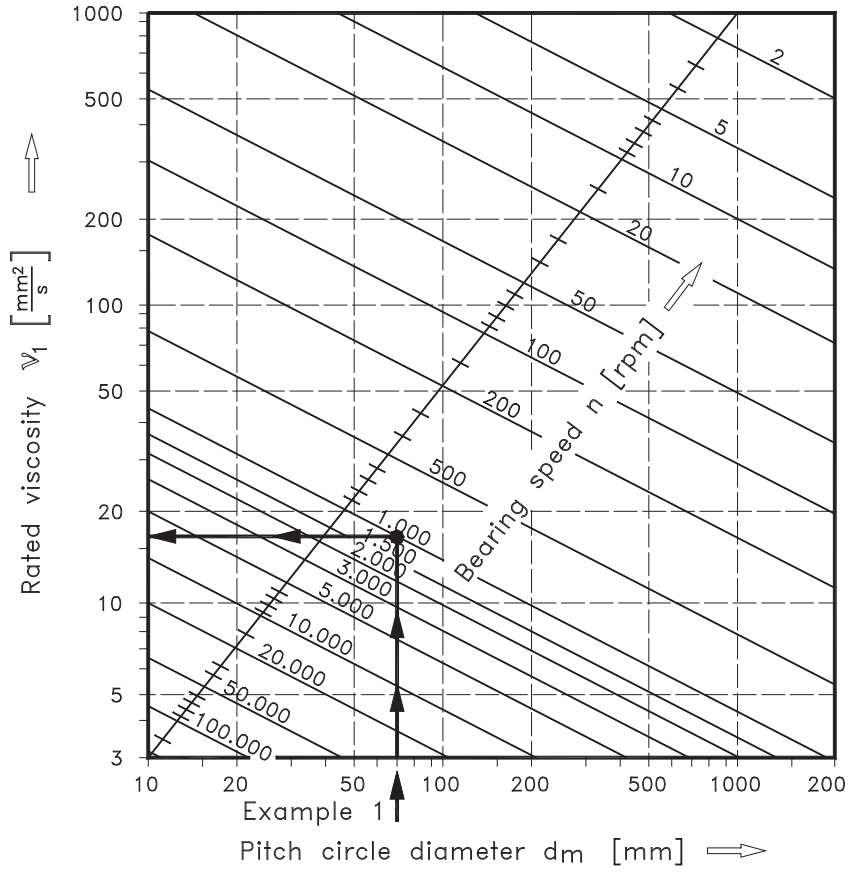

Fig. 6.9

Step 1: Pitch circle diameter d_m = (d + D) / 2 = (50 + 90) /2 = **<u>70 mm</u>**

Step 2: Strike a line in the diagram fig. 6.9 from the X-axis starting at a pitch diameter of $\mathbf{d_m = 70}$ **mm** (see arrows). Go straight upwards until the line crosses the required speed, in this example the line of **1000 rpm**. From this cross point go straight to the scale located at the left diagram border where the (**required**) **rated viscosity** ν_1 for the individual operating conditions can be found. In the actual example ν_1 amounts to approximate **16 mm² / s**.

ν- t-Diagram

The dynamic viscosity of a lubricant varies considerably with its actual temperature. Mineral oils get thinner at higher temperatures, this means the viscosity decreases. At low temperatures, however, lubricants get stiffer this means that their viscosity increases relative to their kinematic viscosity ν_{40}. Therefore as the base oils react differently to temperature and other variations, the viscosity of oils and greases also are affected differently.

The **ν-t-diagram** (fig. 6.10) shows the correlation of the most common grades of nominal viscosity ν_{40} for mineral oil based lubricants.

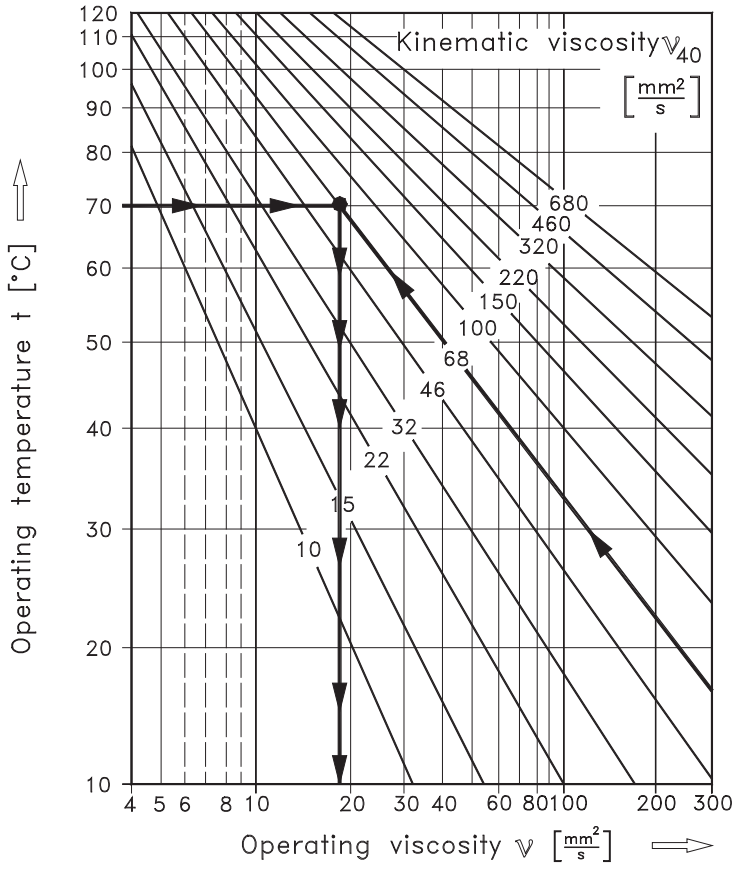

Fig. 6.10

Step 3: Follow the line of the kinematic oil viscosity ν_{40} = 68 mm² / s in diagram fig. 6.10 until crossing the line representing the operating temperature **t** = 70°C (158°F). Strike a line downwards to the horizontal axis to get the viscosity ν for this operating temperature. In this example the (actual) operating viscosity ν is approximately **18 mm² / s**.

Viscosity ratio

With the values for ν and ν_1 the **viscosity ratio** κ may be determined using formula Eq. 6.17. This figure indicates the ratio of **operational viscosity** ν to the (**required**) **rated viscosity** ν_1.

$$K = \frac{\nu}{\nu_1}$$

(Eq. 6.17)

where

κ = Viscosity ratio
ν = (**Actual**) **operating viscosity** anticipated for the given conditions [mm² / s] (see evaluation in fig. 6.10)
ν_1 = For the actual bearing size and speed (**required**) **rated viscosity** [mm² / s] (see evaluation in fig. 6.9)

A "κ"-value of ≥ 1 indicates good or even very good lubrication. If "κ" is below 1, pure separation will not occur and lubricants with additives should be used.
Further information is provided in the chapter "**Lubrication of Rolling Bearings**" (page **330**).

Step 4:

In the given example the viscosity ratio κ is:

$$K = \frac{\nu}{\nu_1} = \frac{18}{16} = 1{,}125$$

(Eq. 6.18)

This shows that the selected lubricant is in terms of its viscosity a good choice for the anticipated operation conditions.

The viscosity anticipated should enable sufficient separation of the bearing surfaces.

Step 5:

Determination of factor a_{ISO}

With the κ-value obtained in Step 4 the right curve selection has to be made for the right product.

- Fig. 6.11 for radial ball bearings
- Fig. 6.12 for radial roller bearings
- Fig. 6.13 for axial ball bearings
- Fig. 6.14 for axial roller bearings

The intersection of the quotient ($\frac{e_c * C_u}{P}$) with the curve of corresponding κ gives the desired coefficient a_{ISO}.

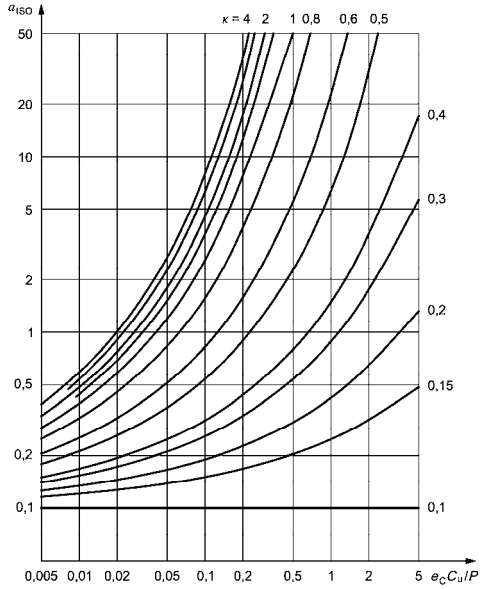

Fig. 6.11
The factor a_{ISO} for radial ball bearings

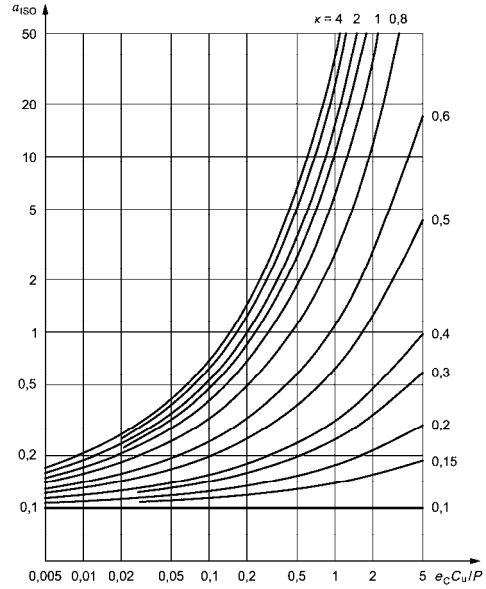

Fig. 6.12
The factor a_{ISO} for radial roller bearings

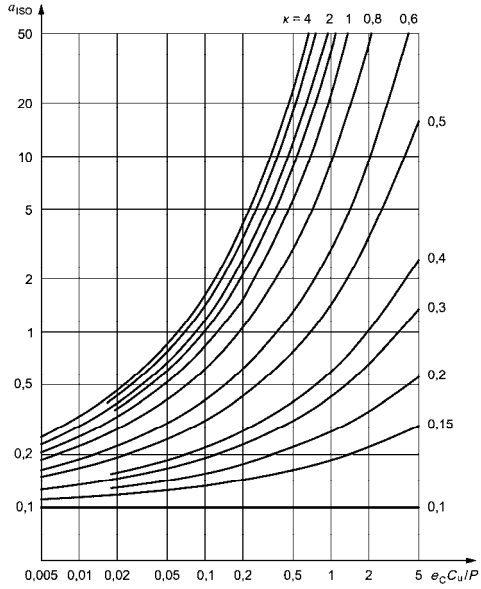

Fig. 6.13
The factor a_{ISO} for axial ball bearings

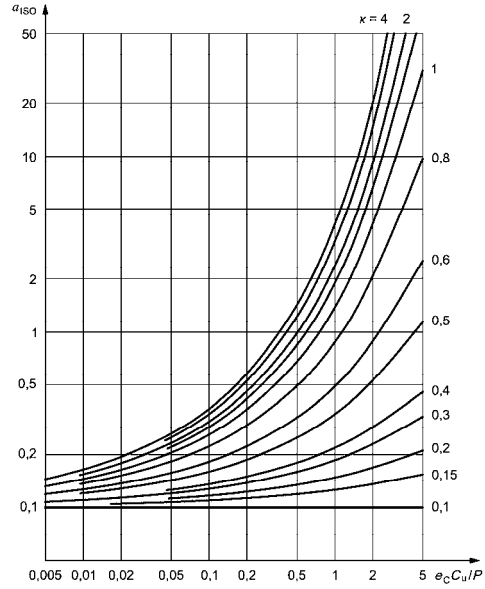

Fig. 6.14
The factor a_{ISO} for axial roller bearings

Further Parameters to be Considered at Bearing Selection

Required Minimum Load

Rolling bearings may fail not only due to overloading but due to underloading, too.

A certain minimum load is required to force the rolling elements to rotate along and around the raceways in an optimum way, without generating excessive sliding friction.

For applications where the bearings do not attain this required minimum load the probability of sliding friction will occur resulting in excessive wear.

When excessive sliding friction occurs, the lubrication layer between the bearing components may be sheared through and metallic contact will occur.

Such metal to metal contact causes wear and material smearing to the contacting partners. Subsequently this bearing damage will give noticeable high running noise, rough running and high vibrations. Additionally the operating temperature will rise quickly until eventually the bearing will fail. The fatigue based rating life is not capable of taking these effects into account.

The minimum magnitude of load for satisfactory running performance depends on the bearing type used and the individual operation speed.

In the vast majority of applications the required minimum load will already be satisfied by the weights of shaft and other assembled associated part.

Certain bearing types, particularly thrust bearings, however, are more sensitive to few load conditions due to their kinematic characteristics.

Specific information regarding the minimum load required for **thrust bearings** is given in the individual product information.

For **radial bearings the** following reference values of minimum loads may be applied as long as not stated otherwise in the relevant product chapter.

Bearing type	Required minimum load P_{min}
Radial ball bearing	
Bearings with cages	$\geq 1\ \% * C_r$
Full complement types	$\geq 4\ \% * C_r$
Radial roller bearing	
Bearings with cages	$\geq 2\ \% * C_r$
Full complement types	$\geq 4\ \% * C_r$

Table 6.10

Influence of Operating Temperature

The dynamic load rating of rolling bearings is is standardised in accordance with **DIN ISO 281:2009**. This calculation assumes a certain hardness of the bearing rings and rolling elements usually made of chromium steel.

For all NKE rolling bearings the required hardness is granted by the standard heat treatment of rings and rolling elements up to 150 °C (302 °F).

If the bearing is exposed to permanent high operating temperatures some structural changes within the bearing steels grain structure will occur. Such circumstances may cause changes in the dimensional and geometrical accuracy of bearing rings, including the loss of component hardness. Subsequently the bearing load rating will also decrease.

For these operating conditions NKE offers on request special bearing steel heat treatment designated with:

- S1 for temperatures up to 200 °C
- S2 for temperatures up to 250 °C
- S3 for temperatures up to 300 °C

Friction of Rolling Bearings

Very low friction is one of the major characteristics of rolling element bearings. The frictional moments of rolling bearings are usually so small that they can almost always be neglected in practice, although for some applications even small frictional resistance must be considered.

The frictional resistance for all rolling bearings is dependant not just upon the bearing type and size, but includes specific application data like speed, load and lubrication.

According to their internal contacting geometry deep groove ball bearings in general perform with very low friction which makes them suitable for high speeds. A comparatively high friction, however, is generated with bearing types like cylindrical roller thrust bearings etc.

Contacting **seals** (suffixes **-RS, -2RS**, -**RSR**, **-2RSR** etc.) always generate additional friction due to the preloading of their sealing lips, unlike **shields** (suffixes **-Z**, **-2Z**), that build a non-contacting gap seal to the inner ring and subsequently do not generate additional friction.

An estimation of the frictional moment providing results of sufficient practical accuracy is possible by applying the following formula:

$$M = \frac{\mu * P_{max} * d}{2}$$

(Eq. 6.19)

where

M = frictional moment [Nmm]
μ = frictional coefficient (see table 6.10)
P = equivalent bearing load [kN]
D = bore diameter [mm]

Bearing types	Frictional coefficient μ
Deep groove ball bearing, open	0.0010 ÷ 0.0015
Angular contact ball bearing, single row	0.0020
Angular contact ball bearing, double row	0.0025
Four-point contact ball bearing	0.0025 ÷ 0.0040
Self aligning ball bearing, sealed	0.0010 ÷ 0.0020
Cylindrical roller bearing	0.0015 ÷ 0.0020
Cylindrical roller bearing, full complement	0.0020 ÷ 0.0040
Spherical roller bearing	0.0020 ÷ 0.0025
Tapered roller bearing, single row	0.0015 ÷ 0.0020
Tapered roller bearing, paired	0.0025 ÷ 0.0040
Thrust ball bearing	0.0010 ÷ 0.0020
Cylindrical roller thrust bearing	0.0050 ÷ 0.0070
Spherical roller thrust bearing	0.0020 ÷ 0.0030

Table 6.11

Friction of Sealed Bearings

Bearings with **contacting seals** (suffixes -RS, -2RS, -RSR, -2RSR etc.) always have high friction due to the preloading of their sealing lips touching the inner ring.

This additional friction is estimated using the following formula:

$$M_D = \left(\frac{d + D}{f_3}\right)^2 + f_4$$

(Eq. 6.20)

where

M_D = additional frictional moment due to contacting seals [Nmm]
d = bore diameter of bearing [mm]
D = outer diameter of bearing [mm]
f_3 = type related factor (see table 6.12)
f_4 = type related factor (see table 6.12)

Bearing types	Factors	
	f_3	f_4
Deep groove ball bearing	20	10
Angular contact ball bearing, double row	20	10
Self aligning ball bearing	20	15
Cylindrical roller bearing, full complement	10	50

Table 6.12

The estimated total friction of a sealed bearing equates to approximately:

$$M_{total} = M + M_D \qquad \text{(Eq. 6.21)}$$

The accuracy of calculated values by using the formula mentioned above is sufficient in practical use.

For more accurate calculations please contact our application engineering department.

The crossing point of the κ curve with the value of (ηc * Cu/P) on the horizontal axis determines the factor a_{ISO} for system consideration of lubrication, contamination and bearing material

Selection of Specific Bearing Features

General

After the selection of a suitable bearing type and the determination of its size requirements, several more specific bearing features have to be considered to satisfy the application requirements.

Suitability for Speeds

Bearings can be operated safely to a certain limiting speed. This limiting speed is determinded by the type of bearing, its size, the internal bearing design, the external load, the lubrication conditions, etc.

Two rotational speeds are displayed in the product tables:

- the (thermal) speed rating and
- the (kinematic) limiting speed.

Thermal Speed Rating

The calculation of the thermal speed rating $n_{\theta r}$ is standardized in ISO 15312. It is the rotational speed at which a bearing equilibrium temperature of 70°C is reached under reference conditions. The speed rating is an auxiliary term for calculation of the permissible thermal rotational speed n_θ.

Reference Conditions

The reference conditions reflect common operating conditions of the most important types of bearings and sizes. ISO 15312 defines:

- reference ambient temperature θ_{Ar} = 20°C
- reference temperature (on outer ring) θ_r = 70°C
- load for radial bearings $P_{1r} = 0.05\ C_{0r}$
- reference load for axial bearings $P_{1a} = 0.02\ C_{0a}$
- kinematic oil viscosity at reference temperature
  - for radial bearings: 12 mm^2s^{-1} (ISO VG 32)
  - for axial bearings: 24 mm^2s^{-1} (ISO VG 68)
- the heat flow q_r via the heat emitting reference surface area A_r for
  - radial bearings
    - o $A_r \leq 50\,000\ mm^2$, then $q_r = 0{,}016\ W / mm^2$ (Eq. 6.22)
    - o $A_r > 50\,000\ mm^2$, then $q_r = 0{,}016 * \left(\frac{A_r}{50000}\right)^{-0{,}34}\ W / mm^2$ (Eq. 6.23)
  - axial bearings
    - o $A_r \leq 50\,000\ mm^2$, then $qr = 0{,}020\ W / mm^2$ (Eq. 6.24)
    - o $A_r > 50\,000\ mm^2$, then $q_r = 0{,}020 * \left(\frac{A_r}{50000}\right)^{-0{,}16}\ W / mm^2$ (Eq. 6.25)

Limiting Speed

The (kinematic) limiting speed n_G is based on practical experience and considers additional criteria such as mechanical strength, running behaviour, sealing and centrifugal forces.

Caution!

The limiting speed shall not be exceeded, even at favourable operating or cooling conditions.

For grease lubricated bearings the limiting speed listed in the product tables must be reduced by 25%. An exception are the thrust cylindrical roller bearings, for which the limiting speed must be reduced by 60%.

For sealed and progressed bearings, the reduction in limiting speed was already taken into consideration in the applicable product tables.

Permissible Thermal Rotational Speed

The permissible thermal rotational speed n_θ is calculated in accordance with DIN 732. It is based on the equilibrium of the heat generated by bearing friction and the heat dissipation through the bearing seating, thus resulting in a constant temperature.

The acceptable operating temperature determines the thermal rotational speed n_θ.

Correct mounting, normal radial operating internal clearance and constant operationg conditions are a necessary precondition for the calculation.

The calculation is not applicable for

- sealed bearings with contact seals, because the maximum rotational speed is limited by the maximum relative gliding of the seal lip,
- track rollers,
- axial ball bearings und axial angular contact ball bearings.

Calculation of Permissible Thermal Rotational Speed

The permissible thermal rotational speed n_θ is the product of the thermal reference rotational speed $n_{\theta r}$ multiplied with the speed ratio f_n:

$$n_\theta = n_{\theta r} * f_n \qquad \text{(Eq. 6.26)}$$

Caution!

Check limiting rotational speed n_G !

The rotational speed ratio is calculated by solving the equation (see fig. 6.15)

$$k_L * f_n^{5/3} + k_p * f_n = 1 \qquad \text{(Eq. 6.27)}$$

For common use in the range of $0.01 < k_L < 10$ and $0.01 < k_P < 10$ f_n can be appproximated by:

$$f_n = \frac{490{,}77}{1+498{,}78 * K_L^{0.599} + 852.88 * K_p^{0.963} - 504{,}5 * K_L^{0.055} * K_p^{0.832}} \qquad \text{(Eq. 6.28)}$$

Heat dissipation via bearing seating areas Q_S, (see fig. 6.16)

$$Q_s = k_q * A_r * \Delta\vartheta_A \qquad \text{(Eq. 6.29)}$$

Heat dissipation via lubrication Q_L:

$$Q_L = 0{,}0286 * \frac{KW}{l / min * k} * V_L * \Delta\vartheta_L \qquad \text{(Eq. 6.30)}$$

Total heat dissipation Q:

$$Q = Q_S + Q_L - Q_E \qquad \text{(Eq. 6.31)}$$

Lubrication parameter k_L:

$$k_L = 10^{-6} * \frac{\pi}{30} * n_B * \frac{10^{-7} * f_0 * (\nu * nB)^{\frac{2}{3}} * d_M^3}{Q} \qquad \text{(Eq. 6.32)}$$

Load parameter k_P:

$$k_p = 10^{-6} * \frac{\pi}{30} * n_B * \frac{f_1 * P_1 * d_M}{Q} \qquad \text{(Eq. 6.33)}$$

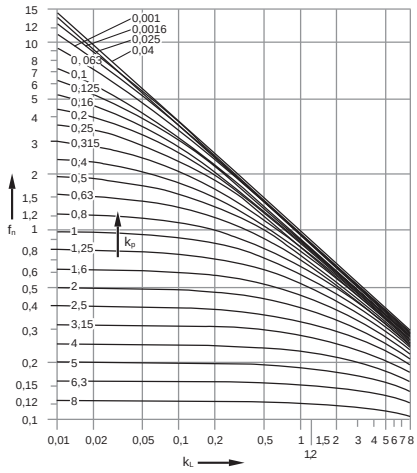

Fig. 6.15

f_n = rotational speed ratio
k_L = lubrication parameter
k_p = load parameter

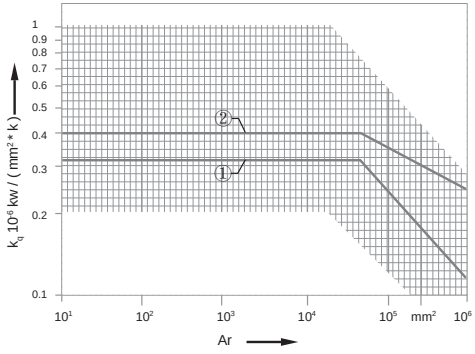

Fig. 6.16

k_q = thermal transmission coefficient

A_r = heat emmiting reference surface area thermaltransmission coefficient K_q, dependant on heat emmiting reference surface area A_r

① standard conditions for radial bearings
② standard conditions for thrust bearings

Designations, Units, Definitions

Heat emmiting reference surface area

- for radial bearings:

  $A_r = \pi*B*(D + d)$

  (Eq. 6.34)

- for axial bearings:

  $A_r = \pi/2*(D^2 – d^2)$

  (Eq. 6.35)

- for tapered roller bearings:

  $A_r = \pi*T*(D + d)$

  (Eq. 6.36)

- for axial self aligning roller bearings:

  $A_r = \pi/4*(D^2 + d_1^2 – D_1^2 – d^2)$

  (Eq. 6.37)

Adjustment of Adjacent Parts

For bearings running at high speeds the adjacent parts must also be of higher precision.

Bearing seats for shafts or housings also require a dimensional and geometrical accuracy which meets the requirements of high-speed applications.

Additionally, all out-of-balance forces of rotating parts must be seriously considered.

Running Noise

NKE rolling bearings run smoothly and therefore have low running noise levels. Some customer applications require varying levels of quiet running within their equipment (e.g. domestic appliances, electric motors, etc.) and subsequently require additional design features.

Bearings with Reduced Running Noise

For increase requirements concerning running noise the application of bearings with higher accuracy class (P6, P5, ...) with reduced tolerances is recommended.

These bearings feature closer geometric tolerances, such as reduced radial run-out value, therefore having higher component accuracy with less vibrations and subsequently noise levels.

Many of these applications run with light preload which dampens vibration and increases the rigidity of the whole bearing arrangement.

Special attention should also be taken to ensure optimum selection of the bearing's clearance.

A proven method to achieve quiet running bearing arrangements is to preload the bearings slightly by use of springs.

This method is often applied in small electric motors (fig. 6.17).

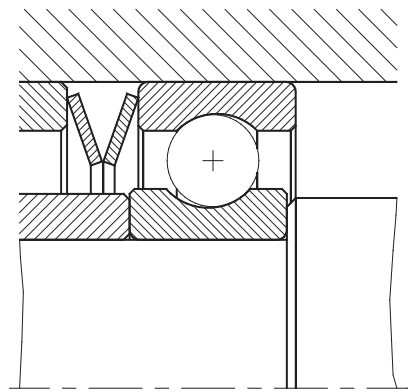

Fig. 6.17

Cage Designs

The vast majority of rolling element bearings has cages. The exception are full complement bearing types which are assembled without a cage.

Despite the fact that a cage is not directly involved in a transmission of forces it has to fulfill several functions:

- **to retain** rolling elements
- **to guide** the rolling elements
- **to reduce friction**
- **to prevent** the rolling elements contacting each other

Furthermore, the cage also affects the speed suitability of a bearing, its vibrating behaviour and its lubrication.

Depending on their type, size and design all NKE rolling element bearings feature a cage design that once established is defined as standard. When a cage is defined as standard the overall bearing description will not include a separate cage suffix.

Some examples of standard cages being used in NKE bearings are:

Pressed steel cage:

Standard cage for deep groove ball bearings and tapered roller bearings.

Polyamide cages:

Standard cage due to its optimum shape accuracy and ease of mounting, especially when dealing with double row bearings. Polyamide cage material is often reinforced with glass-fibres to strengthen its mechanical properties.

Solid cages:

Solid cages are machined from materials such as brass, bronze, steel, light metal alloys or non-metallic materials such as wound resin-coated fabric etc.

Solid brass cages are generally fitted to large bearing sizes, particularly cylindrical and spherical roller bearings.

The individual standard cage of a certain bearing type has been carefully defined and fulfills the overall requirements of general machinery.

All standard cage designs have been proven in countless applications over many years.

In certain circumstances special cage designs may be necessary for specific running conditions, e.g.

strong vibration
shock loads
high speeds
chemical influences
special operating conditions

The production of bearings with special cages may be to customer orders only and consequently extended delivery time and restrict availability.

In such cases we kindly ask you to consult our technical and commercial departments for detailed information.

Misalignments

For each bearing arrangement a certain amount of misalignment between the bearing seats on both shaft and housing must be taken in consideration.

Such misalignments are caused by manufacturing tolerances including shaft bending under external load.

In many applications misalignment may be eliminated by correctly defined manufacturing tolerances or alternative manufacturing procedures. In cases where this is neither practical nor economical, (e.g. large heavy machinery, long transmissions or multi-shaft transmissions) some compensation for assembly misalignment must be considered during the bearing selection and design stage.

According to their internal design each bearing type features different abilities to compensate misalignments.

A particularly good compensation of misalignments is allowed by the self aligning bearing types, such as self aligning ball bearings, spherical roller bearings and thrust ball bearings with spheroid housing washers. Single row deep groove ball bearings, for example, allow according to their individual operating clearance, angular misalignments up to 10 angular minutes.

In case of single row cylindrical roller bearings the maximum permissible amount of angular misalignment is limited from 2 up to 4 angular minutes.

Several bearing types do not permit any misalignment.

In all these cases a misalignment generates higher bearing internal forces on rolling elements and raceways, thus reducing bearing fatigue life.

For more detailed information on the individual capacity of each bearing type to accommodate misalignments see specific product information pages.

Rigidity

This term describes the magnitude of (elastic) displacement of a rolling bearing under load.

The elastic deformation is very small and therefore will not play any role in the majority of applications.

Only in specific applications, such as machine tool applications which demand a very stiff, rigid bearing arrangement, such displacement requires consideration.

In general, bearings with line contact such as roller bearings provide higher rigidity compared to ball bearings. The stiffness of a bearing arrangement can be improved by applying preload to the bearings.

The most frequently used bearing types in preloaded bearing arrangements are angular contact ball bearings (fig. 6.18) and tapered roller bearings.

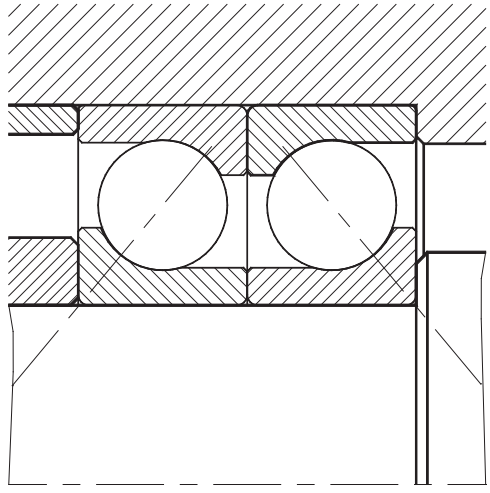

Fig. 6.18

For detailed information see chapter “**Bearing Clearance**” page **319.**

General

Each bearing application has to be understood as a complex system that consists of several interacting factors.

The most important in fluencing parameters are:

- type and size of bearing.
- choice of specific bearing characteristics in accordance to actual operation conditions.
- bearing quality.
- correct mounting and ease of adjustment.
- proper design of bearing location.
- proper bearing fits.
- adequate dimensional and geometric accuracy of adjacent parts.
- efficient and effective lubrication.
- adequate sealing of bearing arrangement.
- effective heat dissipation.

This system must also be actioned collectively, objectively and equally for each influencing parameter, otherwise, the application design and bearing arrangement may result in premature failure.

Bearing Arrangements

At the design stage of bearing arrangements and locations proven designs may be used for reference.

Floating and Locating Bearings

Basic consideration for the arrangement of the single bearings within their locations to accommodate the specific function of the bearing as a **locating bearing** or **non-locating (floating) bearing**:

- **locating bearings** are those bearings that hold the position of the shaft axially.

  Locating bearings always have to take thrust loads.
- Unlike the locating bearings, a shaft may have a **non-locating bearing** to accommodate applied loads and to guide the rotating machine element precisely in the radial direction.

The non-locating bearings also compensate for any variation in length due to thermal movement. This compensation may occur either within the bearing (e.g. in case of needle roller bearings) or by suitable designed seats that allow the bearing to float.

Usually in each bearing arrangement one **locating bearing** guides the shaft in axial direction, all other bearings have to be nonlocating bearings.

A special configuration is embodied by socalled "**cross-locating**" bearing arrangements and by bearing arrangements that are mounted with preload.

These arrangements do not have defined locating or floating bearings. The axial location of the shaft is by one of the bearings based on the direction of load

Suitability of Different Bearing Types for Locating or Non-Locating Positions

In principle all types of radial bearings that may accommodate thrust loads can be used as **locating bearings**.

Examples are deep groove ball bearings, angular contact ball bearings (always used in pairs or sets), tapered roller bearings (to be used in sets), spherical roller bearing etc.

Also thrust bearings are suitable locating bearings, but do not accommodate radial loads in all most cases.

The ideal **non-locating bearings** are bearing types that allow axial displacement inside the bearing such as cylindrical roller bearings having one ring without flanges (N, NU, NN.., RNU, RN.. types), needle roller bearings, needle roller and cage assemblies.

Almost all other bearing types may be used as non-locating bearings, too, but the possibility to

accommodate length changes due to thermal expansion must be enabled by means of design measures, (e.g. by loose fits).

For "**cross-locating**" bearing arrangements all types of radial bearings are suitable that will accommodate thrust loads in at least one direction.

Examples are cylindrical roller bearings (types NJ, NF,..), also deep groove ball bearings, angular contact ball bearings and spherical roller bearings etc.

Examples of Bearing Arrangements

There are many different possibilities to design bearing arrangements of rotating machine components, which may be considered according to the particularly given circumstances.

For possible design solutions of locating and non-locating bearing arrangements used for rotating machine components, see fig. 7.1.

Note:
"**F**" means **position** of **locating bearing**
"**L**" indicates the **non-locating bearing**

Explanation to fig. 7.1

Fig. 7.1a)

Simple arrangement with two deep groove ball bearings, one acting as a locating bearing while the other one sits axially free in the housing to accommodate length changes.

A frequently used arrangement for small machines, gearboxes and electric motors.

Fig. 7.1b)

Arrangement similar to fig. 7.1a. However, in this arrangement the non-locating bearing has slight axial preload by means of **springs**.

This measure enables the elimination of the residual bearing clearance which results in very smooth running of the shaft.

Often used for small electric motors.

Fig. 7.1c)

Bearing arrangement comprising of a **deep groove ball bearing** as **the locating bearing** and a **NU-type cylindrical roller bearings** as the **non-locating bearing**.

Because the inner ring has no flanges, the cylindrical roller bearing enables length changes within itself.

Such an arrangement is adequate where tight fits on all bearing rings are required, e.g. for large electric motors or generators.

Examples of Locating and Non-Locating Bearing Arrangements

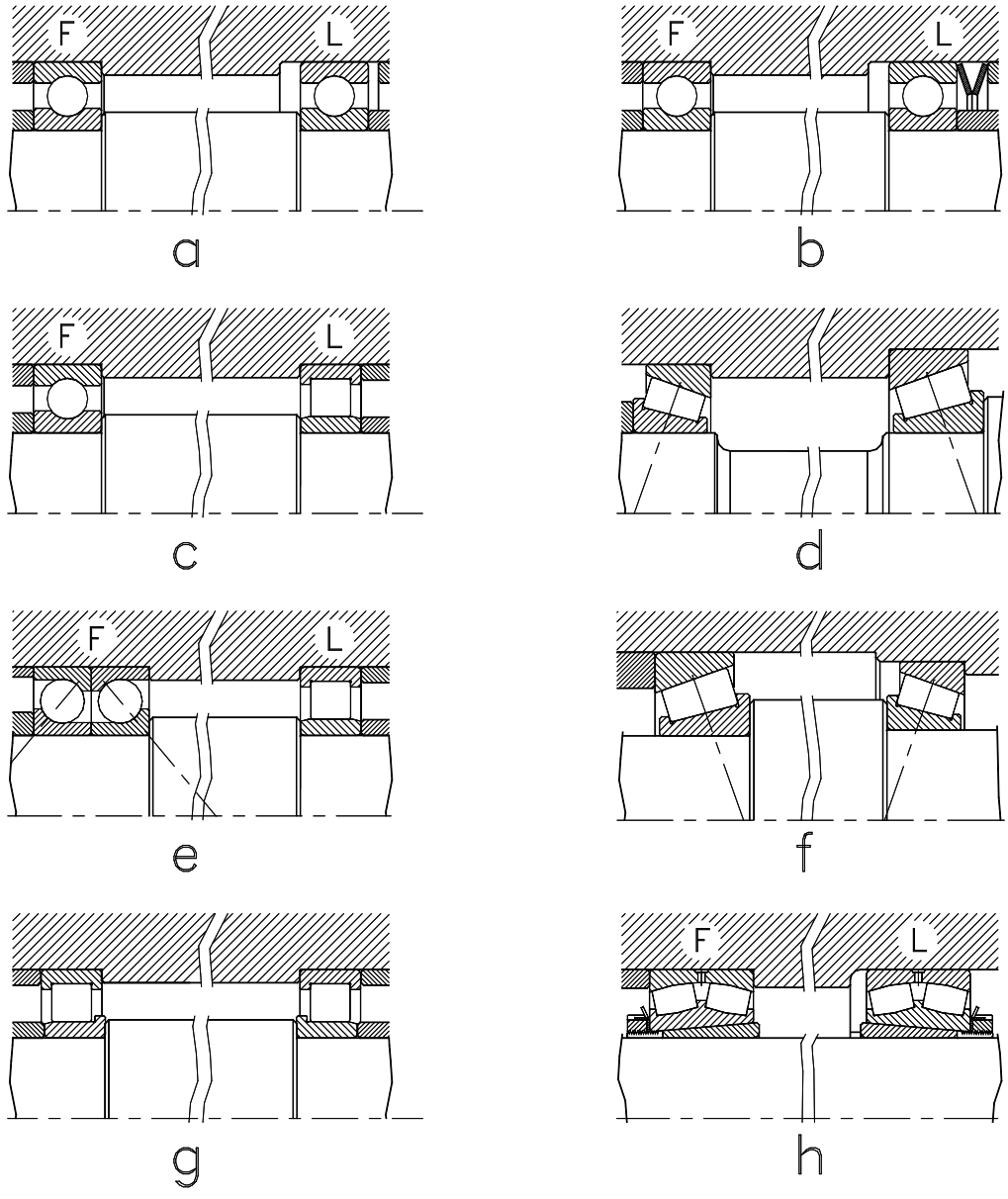

Fig. 7.1

Fig. 7.1d)

Assembly of two **tapered roller bearings, located** in **back-to-back arrangement**.

Due to the back-to-back arrangement the **support width**, that indicates the effective acting distance of bearing positions, will be enlarged which allows a very rigid bearing arrangement.

Such bearing arrangements enable a transmission of high forces within a limited space but require careful adjustment for the required clearance or preload.

Frequently angular contact ball bearings are also used in backtoback auctioned arrangements.

Typical application examples are pinion bearings and wheel bearing arrangements for motor vehicles.

Fig. 7.1e)

Bearing arrangement is for running under combined loads where high axial running accuracy is required.

A pair of **angular contact ball bearings** in **back to back arrangement** acts as the locating bearing, a **NU-**type **cylindrical roller bearing** is used in the non-locating bearing position.

Such a bearing arrangement is suitable to accommodate thrust forces of medium size, even under high speeds.

Fig. 7.1f)

A **pair of tapered roller bearings** in **face-to-face arrangement**.

By arranging tapered roller bearings this way, the support width will become smaller than their nominal centre distance. Bearings arranged **face-to-face** provide less rigidity and thus a more flexible bearing arrangement which is not so sensitive to misalignments compared to back-to-back arrangements.

This equally applies to **angular contact ball bearings** frequently used in this way.

When bearings are mounted face-to-face, they require careful adjustment.

Typical fields of applications are gearboxes.

Fig. 7.1g)

Cross locating arrangement with two **NJ-type cylindrical roller bearings**.

With this arrangement the axial location of the shaft is supported by both bearings alternating, as this bearing type allows for length change of shaft within the bearings. Thus tight fits are possible to both the bearing seats of shaft and housing.

Such arrangements are preferably used for vibrating shafts and some small gearboxes.

Fig. 7.1h)

shows two **spherical roller bearings** enabling the transmission of very heavy radial loads; additionally, they will support limited thrust loads.

This bearing arrangement also allows misalignments and shaft deflections or bending.

When arranging spherical roller bearing in this way, care must be taken to allow axial movement of the non-locating bearing by using a loose fit in the housing.

It is also possible for bearings with tapered bores to be mounted onto shafts using adapter or withdrawal sleeves; this allows shaft seats of less accuracy to be used.

Typical applications for such bearing arrangements are: the agricultural industry, for long transmissions and heavy machinery.

Selection of Bearing Fits

Rolling bearing rings have extremely thin sections when compared to their potential load ratings.

This is why bearing rings have to be supported sufficiently on their circumferences for optimum use of their capabilities.

This support and the correct selection of shaft and housing fits will ensure effective radial location at the bearing seating.

Therefore the correct choice of fits is significant for the optimum function of all bearing arrangements.

The pure axial location of a bearing is not a suitable substitute for a proper fit!

In the case of loose fits relative moment may occur between the bearing rings and the contacting faces of shaft or housing. This may lead to bearing ring rotation causing damage to all contacting surfaces and premature failures. Heavy interference fits, however, could cause outer ring diameter contraction and inner ring expansion this resulting in residual radial clearance reduction leading to potentially cracked rings and bearing failure.

It is now seen that all dimensions, tolerances and geometric values must be clearly defined to obtain an effective and optimum bearing seat.

To determine the correct fit for bearing shafts and housings the following criteria must be considered.

a) **type and magnitude of applied load**
b) **type and size of bearing**
c) **required running accuracy of total bearing arrangement**
d) **materials of shaft and housing**
e) **possibilities of mounting and dismounting the bearing arrangement, when necessary**

We distinguish between the **two base fit types** as follows:

Interference fits
are very **tight contacts** of mating parts which cause stresses within the bearing material structure. Additionally, the bearing outer ring will contract and the inner ring will expand. This will have an influence on the remaining actual running clearance.

Loose fits
enable axial **displacement** of bearing rings relative to the bearing seats.

Furthermore bearing rings that have loose fits are usually easier to mount or dismount than rings with interference fits.

Type and Magnitude of Applied Loads

Type and magnitude of the load applied to a bearing are the most significant factors that determine the required bearing fit.

The main criterion is the **direction** of the load acting relative to the motion of a bearing ring.

Accordingly, three main features distinguish how a force acts relative to the bearing rings:

- as a **point load**
- as **circumferential load**
- with **indeterminate load direction**

Point load

Point loading occurs when either the load or bearing ring is stationary, or if both are rotating with the same angle speed.

In both cases a **point** is loaded on the circumference of the bearing raceway while the other areas are not affected.

Bearing rings exposed to **point loading** do not have a tendency to rotate. This is why loose fits are suitable for point loaded rings.

Circumferential load

In the case of **circumferential load**, however, each single point on the circumference of the raceway will be loaded. This occurs, if the bearing ring is stationary while the load rotates or, if the load is stationary on the rotating ring.

Bearing rings under circumferential load have a tendency to rotate together with the shaft.
To prevent the rings from moving, all rings running under circumferential load should have tight fits.

Indeterminate load direction

This applies, when **both point loading and circumferential loading** occurs as in the case of the bearings used for crankshaft drives.

A more precise view of this topic can be seen from the examples shown in table 7.1

Examples of loading	Inner ring		Outer ring		Application examples
	Type of loading	Fit	Type of loading	Fit	
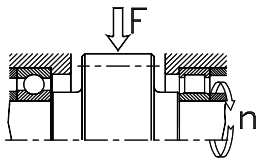 - shaft rotates with inner ring - stationary loading - outer ring stands still	**circum-ferencial load** on inner ring	**tight shaft fits** required	**point load** on outer ring	**loose housing fits** permissible	electric motors spur gear
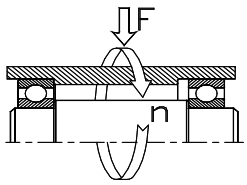 - housing and outer ring rotate - constant direction of load - shaft and inner ring stand still	**point load** on inner ring	**loose shaft fits** permissible	**circum-ferencial load** on outer ring	**tight housing fits** necessary	track wheels rope sheaves wheel bearings
- shaft rotates with inner ring - load rotates with inner ring	**point load** on inner ring	**loose shaft fits** permissible	**circum-ferencial load** on outer ring	**tight housing fits** required	oscillating screens vibrating compactors
- **indeterminate** load direction	**in-determinate**	**tight fits** required	**in-determinate**	**tight fits** required	crankshaft drives

Table 7.1

Magnitude of Loading

Along side its type, the magnitude of the applied load also has a significant role in the selection of bearing seating fits.

The higher the load the tighter the fit must be. This also applies if vibrations or heavy shock loads are to be expected.

The relative magnitude of load is defined in DIN 5425 part 1 as a ratio of the acting forces relative to the load capacity of a radial bearing (table 7.2).

Relative loading in % of radial load capacity C_r		Classification of the bearing for
>	≤	
--	7 %	**low** loaded
7 %	15 %	**medium** loaded
15 %		**high** loaded

Table 7.2

Following this classification the tolerance fields of bearing fits are chosen from the empirical values stated in the tables 7.7 to 7.10.

Bearing Type and Size

In general the larger the bearing the tighter the interference fit must be.

Fits for the mounting of roller bearings are usually tighter than those used for ball bearing applications.

The rings of cylindrical roller bearing types, which allow an internal compensation of length change of the shaft (**N**, **NU**, **NN**, etc.), may be mounted with interference fits on both rings, even if they are used as non/locating bearing.

Shaft and Housing Materials

Shafts and axles that require machined bearing seats are usually made from solid round stock of mild steel.

This is why the following values and recommendations for the selection of bearing fits refer to solid steel shafts and housings made either from steel, cast iron or cast steel.

In some cases **hollow shafts** are also used, which require tighter fits than comparable solid shafts.

When housings are made from light metal alloys, such as aluminium or magnesium tighter housing fits must be considered.

Housings made from light metal alloys have a much higher coefficient of expansion than bearing outer rings made from steel.

This causes a loss of clamping forces, the housing fit will become loose, allowing the outer ring to rotate in the housing.

Adjustment, Mounting and Dismounting

In the definition of bearing fits the requirements of mounting, adjusting and, when applicable, the dismounting of the bearings must be taken into consideration.

This applies particularly to bearing arrangements that require adjustment after bearing mounting.

Fits of Split Bearing Housings

For split housings the tolerance field of the housing seat should not be tighter than “**H**” or “**J**”.

This is due to the risk of roundness deformations of the bearing outer rings due to possible geometrical failures of the split housing.

Shaft Fits for Bearings on Adapter or Withdrawal Sleeves

Usually the required running accuracy of bearings that are mounted using adapter or withdrawal sleeves is not too high.

Small and medium sized bearings are frequently mounted using adapter or withdrawal sleeves directly onto bright drawn bars.

When mounting the bearings by adapter or withdrawal sleeves on solid **machined shafts** the following tolerances for dimensional and form accuracy of the bearing seats is to be used, see table 7.3:

Field of tolerance	Form tolerance
h 7, h8	$\frac{IT\ 5}{2}$
h 9	$\frac{IT\ 6}{2}$

Table 7.3

Required Running Accuracy of Bearing Seatings

The relatively thin walled bearing rings always adopt the form of their shafts and housing seats.

Therefore the **form accuracy** of the bearing seatings must correspond to the required running accuracy of the bearing itself.

The tolerances of **running and form accuracy** of the bearing seats have to be smaller than the diameter tolerances in the corresponding tolerance fields.

Values of more common ISO tolerance grades are shown in **table 7.4**.

For bearings of normal tolerance (**PN**) shaft seats should correspond to IT grade **5**.

Housing seats for less critical applications have to be machined according to ISO grade **IT6**.

ISO tolerance grades (IT-qualities)

Dimensions are given in **[mm]**, tolerance values are given in microns **[µm]**

over incl.	1 3	3 6	6 10	10 18	18 30	30 50	50 80	80 120	120 180	180 250	250 315	315 400	400 500	500 630	630 800	800 1000	1000 1250	1250 1600
IT 0	0,5	0,6	0,6	0,8	1	1	1,2	1,5	2	3	4	5	6	--	--	--	--	--
IT 1	0,8	1	1	1,2	1,5	1,5	2	2,5	3,5	4,5	6	7	8	--	--	--	--	--
IT 2	1,2	1,5	1,5	2	2,5	2,5	3	4	5	7	8	9	10	--	--	--	--	--
IT 3	2	2,5	2,5	3	4	4	5	6	8	10	12	13	15	--	--	--	--	--
IT 4	3	4	4	5	6	7	8	10	12	14	16	18	20	--	--	--	--	--
IT 5	4	5	6	8	9	11	13	15	18	20	23	25	27	29	32	36	42	50
IT 6	6	8	9	11	13	16	19	22	25	29	32	36	40	44	50	56	66	78
IT 7	10	12	15	18	21	25	30	35	40	46	52	57	63	70	80	90	105	125
IT 8	14	18	22	27	33	39	46	54	63	72	81	89	97	110	125	140	165	195
IT 9	25	30	36	43	52	62	74	87	100	115	130	140	155	175	200	230	260	310
IT 10	40	48	58	70	84	100	120	140	160	185	210	230	250	280	320	360	420	500
IT 11	60	75	90	110	130	160	190	220	250	290	320	360	400	440	500	560	660	780
IT 12	100	120	150	180	210	250	300	350	400	460	520	570	630	700	800	900	1050	1250

Table 7.4

Form Tolerances of Shaft and Housing Seats

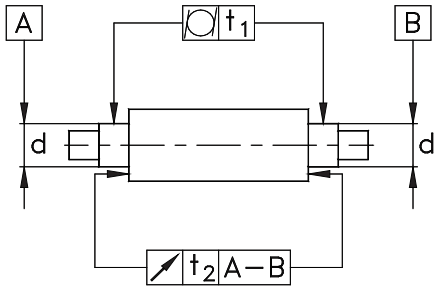

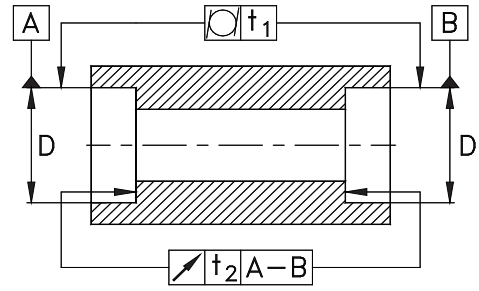

t_1 tolerance of cylindricity
t_2 tolerance of rectangularity

Bearing tolerance class	Location of bearing seat	Recommended tolerance field	Required cylindricity in case of circumferential loading t_1	Required cylindricity in case of point loads t_1	Tolerance for rectangularity t_2
Normal, P6X	shaft	IT 6 (IT5)	$\frac{IT4}{2}\left(\frac{IT3}{2}\right)$	$\frac{IT5}{2}\left(\frac{IT4}{2}\right)$	IT 4 (IT3)
	housing ØD ≤ 150 mm	IT 6 (IT7)	$\frac{IT4}{2}\left(\frac{IT3}{2}\right)$	$\frac{IT4}{2}\left(\frac{IT5}{2}\right)$	IT 4 (IT5)
	housing ØD > 150 mm	IT 7 (IT6)	$\frac{IT5}{2}\left(\frac{IT4}{2}\right)$	$\frac{IT6}{2}\left(\frac{IT5}{2}\right)$	IT 5 (IT4)
P6	shaft	IT5	$\frac{IT3}{2}\left(\frac{IT2}{2}\right)$	$\frac{IT4}{2}\left(\frac{IT3}{2}\right)$	IT3 (IT2)
	housing	IT6	$\frac{IT4}{2}\left(\frac{IT3}{2}\right)$	$\frac{IT5}{2}\left(\frac{IT4}{2}\right)$	IT4 (IT3)
P5	shaft	IT5	$\frac{IT2}{2}$	$\frac{IT3}{2}$	IT2
	housing	IT6	$\frac{IT3}{2}$	$\frac{IT4}{2}$	IT3

Table 7.5

Form Accuracy of Bearing Seats

The **form accuracy** of bearing seats is defined by the **cylindricity** of a bearing seat (roundness of bore or shaft diameter, respectively, parallelism and rectangularity) and by the perpendicularity of abutments like shaft shoulders etc.

With increasing expectations in the running accuracy of bearing arrangements and for bearings of higher precision classes, tolerances of cylindricity and rectangularity of bearing seats must be decreased accordingly.

Table 7.5 shows some empirical values for a simple selection of the tolerances of **form accuracy** (**t_1**) and the **rectangularity** (**t_2**) depending on the tolerance class of the bearing used.

The tolerance values given are for **cylindricity (t_1)** and refer to half the nominal diameter.

For measurements of shaft diameter or housing bores by **two-point measurement** the tolerance values have to be doubled, thus **$2 * t_1$**.

As a rule of thumb it is observed, that the value of the **cylindricity tolerance (t_1)** must not exceed half of the dimensional tolerance.

Surface Roughness of Bearing Seats

Along side the dimensional and form accuracy of bearing seats the **surface roughness** of a bearing seat may influence the function of a bearing arrangement.

The rougher the bearing seat surface the less effective is the surface of the abutting face, initial surface roughness is smoothed between contacting surfaces.

Such a smoothening causes a loss in interference which may affect the general characteristics of a bearing seat.

Bearing seats that have rougher surfaces are more affected by fretting corrosion than smooth surfaces.

Where high running accuracy is required it is particularly important that all abutment surfaces around the bearing arrangement are manufactured accordingly.

Table 7.6 contains some recommendations for the selection of surface roughness of bearing seats and shaft diameters for applications general machinery.

Nominal diameter of bearing seat [mm]		Accuracy of diameter tolerance of shaft and housing seats according to IT-quality					
		IT 7		IT 6		IT 5	
>	≤	R_z	R_a	R_z	R_a	R_z	R_a
--	80	10	1,6 (N7)	6,3	0,8 (N6)	4	0,4 (N5)
80	500	16	1,6 (N7)	10	1,6 (N7)	6,3	0,8 (N6)
500	1250	25	3,2 (N8)	16	1,6 (N7)	10	1,6 (N7)

Table 7.6

Shaft and Housing Fits

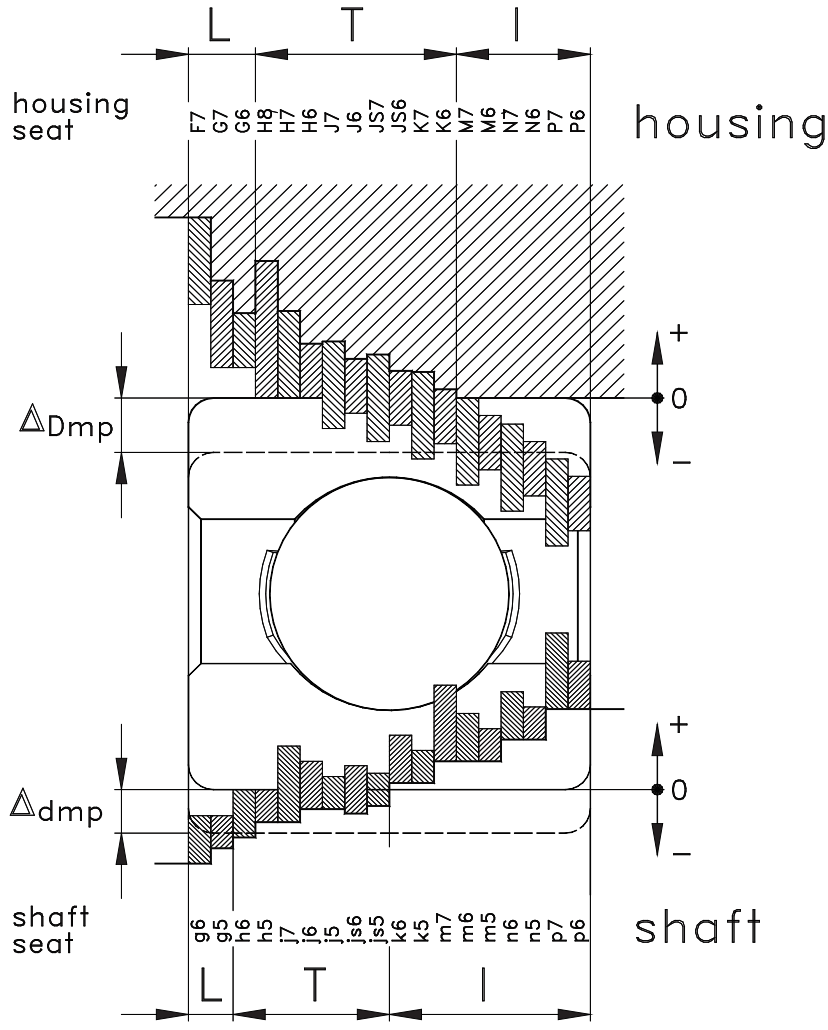

Fig. 7.2

Explanation:

Δ_{Dmp}	Tolerance of bearing outer diameter
Δ_{dmp}	Tolerance of bearing bore
L	**Loose** fit
T	**Transition** fit
I	**Interference** fit

Fig. 7.2 shows schematic values of the most frequently used ISO tolerance fields, for metric radial bearings of normal tolerance class PN, experienced in general machinery applications.

Metric bearings, with some exceptions, generally have minus tolerances for bore diameter, outside diameter and width.

Please note:

Tolerances of inchsized bearings follow different rules compared metric bearings.

Therefore, for shafts and housing fits these different rules must be considered.

Three different categories of fit may result this is dependant on the individual fits selected for the bearing seats.

Loose fit:
This enables axial displacement of the respective bearing in either direction.

Transition fit:
This is where the respective bearing has either slightly loose or tight bearing seat contact.

Interference fit:
This ensures a very tight fit on the respective bearing seat without axial displacement.

The use of heavy interference fits affects the residual radial clearance of a mounted bearing by expanding the inner ring and by contracting the outer ring.

Therefore, for some bearing applications this phenomenon must be considered at the bearing selection and design stage. It may be necessary to compensate for the clearance reduction by using a greater initial bearing clearance band, (i.e. **C3**, **C4**, **C5** or a **special clearance**).

Excessive interference on bearing inner shaft fits can, in extreme cases, result in inner rings cracking.

If in doubt, please contact the NKE technical department.

The simple solution for fits of bearing shaft and housing seats are listed in **tables: 7.7**, **7.8**, **7.9** and **7.10** these recommendations consider bearing type, size and the relative bearing load, (see also **table 7.2**).

Fits of Thrust Bearings

Generally, thrust bearings must not accommodate radial loading, the exception to this rule being for cylindrical roller thrust bearings or needle roller and cage thrust assemblies. To achieve this stationary washer normally will have a very loose fit whilst the rotating washer will be a close fit.

For thrust bearing washers special attention must be paid to the rectangularity of the supporting surfaces, to ensure uniform load distribution within the bearing, this tolerance should correspond to ISO tolerance field IT 5 or better.

For thrust bearings designed to accommodate radial and axial loads (e.g. spherical thrust roller bearings) the tolerance values for shaft and housing seats must be selected in the same way as the fits for radial bearings.

Recommended Shaft Fits for Radial Bearings with Cylindrical Bore

Loading of inner ring	Bearing type	Bore diameter d >	Bore diameter d ≤	Relative loading axial displaceability	ISO tolerance fields
Point load	**Ball bearings Roller bearings Needle roller bearings**	**all diameters**		non-locating bearing, inner ring displaceable	**g6**
				adjusted tapered roller bearings adjusted angular contact ball bearings	**h6, j6**
Circum-ferential load or **indeterminate direction of roller bearings loading**	**Ball bearings**	--	40	**normal** load	**j6 (j5)**
		40	100	**slightly** loaded	**j6 (j5)**
				normal and **high** loads	**k6 (k5)**
		100	200	**slightly** loaded	**k6 (k5)**
				normal and **high** loads	**m6 (m5)**
		200	--	**normal** loaded	**m6 (m5)**
				high loads, shock load	**n6 (n5)**
	Roller bearings including needle roller bearing	--	60	**slightly** loaded	**j6 (j5)**
				normal and **high** loads	**k6 (k5)**
		60	200	**slightly** loaded	**k6 (k5)**
				normal loads	**m6 (m5)**
				high loads	**n6 (n5)**
		200	500	**normal** loads	**m6 (n6)**
				high loads, shock loads	**p6**
		500	--	**normal** loads	**n6 (p6)**
				high loads	**p6**

Table 7.7

Recommended Fits for Shaft Washers of Thrust Bearings

Type of loading	Bearing type	Loading of shaft washer	Bore diameter d >	Bore diameter d ≤	ISO tolerance fields
Pure thrust load	**Thrust ball bearing,** single direction		all diameters		**j6**
	Thrust ball bearing, double direction		all diameters		**k6**
	Cylindrical roller thrust bearings **Needle roller and cage thrust assembly** with shaft washer		all diameters		**h6(j6)**
	Cylindrical roller and cage thrust assembly **Needle roller and cage thrust assembly** with **LS**-raceway washer or **AS**-thrust washer		all diameters		**h10**
	Cylindrical roller and cage thrust assembly **Needle roller and cage thrust assembly**		all diameters		**h8**
Combined load	Spherical roller thrust bearings	**Point load**	all diameters		**j6**
		Circumferential load	--	200	**j6(k6)**
			200	--	**k6(m6)**

Table 7.8

Recommended Housing Fits for Radial Bearings

Loading of outer ring	Relative loading, axial displaceability	Remarks	ISO tolerance fields
Point load	Non-locating bearing, outer ring may be moved easily	**normal** running accuracy	**H8**
		if **high** running accuracy is required	**H7**
		if **very high** running accuracy is required	**H6**
	Displaceable outer rings of paired tapered roller bearings and angular contact ball bearings	**normal** running accuracy	**H7, J7**
		if **high** running accuracy is required	**H6, J6**
	In the case of **additional heat fed** via the shaft		**G7**
Circumferential load or **Indeterminate load direction**	**Slightly** loaded only	**normal** running accuracy	**K7**
		if **high** running accuracy is required	**K6**
	Normal load, some shock loading	**normal** running accuracy	**M7**
		if **high** running accuracy is required	**M6**
	High loads, shock load	**normal** running accuracy	**N7**
		if **high** running accuracy is required	**N6**
	High loads, high shocks or thin-walled housings	**normal** running accuracy	**P7**
		f **high** running accuracy is required	**P6**

Table 7.9

Recommended Housing Fits for Thrust Bearing

Type of Loading	Bearing types	Remarks	ISO - tolerance-felder
Pure thrust load only	Thrust ball bearing	for **normal** running accuracy	**E8**
		if **higher** running accuracy is required	**H6**
	Cylindrical roller thrust bearing Needle roller and cage thrust assembly with housing washer		**H7 (K7)**
	Cylindrical roller and cage thrust assembly Needle roller and cage thrust assembly with **LS**-raceway washer or **AS**-thrust washer		**H11**
	Cylindrical roller and cage thrust assembly Needle roller and cage thrust assembly		**H10**
	Spherical roller thrust bearings	for **normal** loads	**E8**
		for **high** loads	**G7**
Combined loading, in the case of **point loaded** housing washer	Spherical roller thrust bearings		**H7**
Combined loading, as for **circumferentially** loaded housing washer	Spherical roller thrust bearings		**K7**

Table 7.10

Tables of Fits

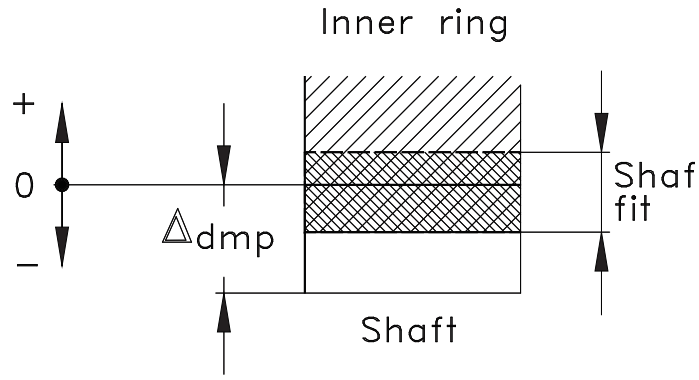

Fig. 7.3

For general machinery applications the most frequent bearing shaft and housing fits are tabulated on **following pages** inclusive.

To determine the theoretical tolerance fields and whether the results indicate loose or interference fit at the bearing seat each appropriate table lists the nominal shaft or housing diameters and their diameter size tolerance range, Δ_{dmp} for shafts and Δ_{Dmp} for housings, to be used in conjunction with a bearing of equal size and to tolerance class (**PN**) normal tolerance.

The following example shows:

Shaft nominal diameter	∅ 75 mm
ISO tolerance field **j5**	+0.006 mm - 0.007mm
Bearing nominal bore diameter	∅ 75 mm
Bearing bore diameter tolerance	(PN)
Δd_{mp}	+0.000 mm - 0.015 mm

Shaft fit ∅ **75 j5**:

	-21
+6	**-12**
-7	7

If these meet, the following values occur (please refer to fig. 7.3):

a) A **maximum interference** will occur when the **largest allowed shaft diameter** meets the **smallest permissible bearing bore**.
In the above example:
│+6 + (-15)│ = **21 µm** (upper value)

b) The **smallest interference** will occur when the **smallest allowed shaft** diameter meets the **largest permissible bearing bore**.
In the above example:
│**-7** + 0│ = **7 µm** (lower value)

c) The **probable** interference assumes the actual dimensions to lie 1/3 of the toler¬ance value apart from the tolerance go side.
In the above example:
12 µm (centre value)

Bold negative figures in the each right half of a field denote interference fit!

Shaft Fits

Nominal shaft diameter **[mm]**
Tolerances are in **[µm]**

Nominal shaft diameter over / incl.	3 / 6		6 / 10		10 / 18		18 / 30		30 / 50		50 / 80		80 / 120		120 / 180	
Deviation Δ_{dmp}	0 / -8		0 / -8		0 / -8		0 / -10		0 / -12		0 / -15		0 / -20		0 / -25	
g5	-4 / -9	**-4 / 0 / 9**	-5 / -11	**-3 / 2 / 11**	-6 / -14	**-2 / 3 / 14**	-7 / -16	**-3 / 3 / 16**	-9 / -20	**-3 / 5 / 20**	-10 / -23	**-5 / 4 / 23**	-12 / -27	**-8 / 4 / 27**	-14 / -32	**-11 / 3 / 32**
g6	-4 / -12	**-4 / 1 / 12**	-5 / -14	**-3 / 3 / 14**	-6 / -17	**-2 / 4 / 17**	-7 / -20	**-3 / 5 / 20**	-9 / -25	**-3 / 6 / 25**	-10 / -29	**-5 / 6 / 29**	-12 / -34	**-8 / 6 / 34**	-14 / -39	**-11 / 6 / 39**
h5	0 / -5	**-8 / -4 / 5**	0 / -6	**-8 / -3 / 6**	0 / -8	**-8 / -3 / 8**	0 / -9	**-10 / -4 / 9**	0 / -11	**-12 / -4 / 11**	0 / -13	**-15 / -6 / 13**	0 / -15	**-20 / -8 / 15**	0 / -18	**-25 / -11 / 18**
h6	0 / -8	**-8 / -3 / 8**	0 / -9	**-8 / -2 / 9**	0 / -11	**-8 / -2 / 11**	0 / -13	**-10 / -2 / 13**	0 / -16	**-12 / -3 / 16**	0 / -19	**-15 / -4 / 19**	0 / -22	**-20 / -6 / 22**	0 / -25	**-25 / -8 / 25**
j5	+3 / -2	**-11 / -7 / 2**	+4 / -2	**-12 / -7 / 2**	+5 / -3	**-13 / -8 / 3**	+5 / -4	**-15 / -9 / 4**	+6 / -5	**-18 / -10 / 5**	+6 / -7	**-21 / -12 / 7**	+6 / -9	**-26 / -14 / 9**	+7 / -11	**-32 / -18 / 11**
j6	+6 / **-2**	**-14 / -8 / 2**	+7 / **-2**	**-15 / -9 / 2**	+8 / **-3**	**-16 / -10 / 3**	+9 / **-4**	**-19 / -11 / 4**	+11 / **-5**	**-23 / -14 / 5**	+12 / **-7**	**-27 / -16 / 7**	+13 / **-9**	**-33 / -19 / 9**	+14 / **-11**	**-39 / -22 / 11**
js5	+2,5 / -2,5	**-11 / -6 / 3**	+3 / -3	**-11 / -6 / 3**	+4 / -4	**-12 / -6 / 4**	+4,5 / -4,5	**-15 / -9 / 5**	+5,5 / -5,5	**-18 / -10 / 6**	+6,5 / -6,5	**-22 / -13 / 7**	+7,5 / -7,5	**-28 / -16 / 8**	+9 / -9	**-34 / -20 / 9**
js6	+4 / -4	**-12 / -7 / 4**	+4,5 / -4,5	**-13 / -7 / 5**	+5,5 / -5,5	**-14 / -8 / 6**	+6,5 / -6,5	**-17 / -9 / 7**	+8 / -8	**-20 / -11 / 8**	+9,5 / -9,5	**-25 / -13 / 10**	+11 / -11	**-31 / -17 / 11**	+12,55 / -12,5	**-38 / -21 / 13**

Example: Shaft ∅ **75 j5** upper limit ("**go** - **side**") +6 µm
lower limit ("**no** - **go side**") -7 µm
Bearing with standard tolerances (**PN**), deviation Δ_{dmp} = 0 / -15 µm

For shaft ∅ **75 j5**:

		-21	interference or clearance if the **go-sides** meet
go-side	+6	**-12**	probable interference or clearance
no-go side	-7	**7**	interference or clearance if the **no-go sides** meet

The bold negative figures in the right hand column denote interference!

Shaft Fits

Nominal shaft diameter **[mm]**
Tolerances are in **[µm]**

over incl.	180 250		250 315		315 400		400 500		500 630		630 800		800 1000		1000 1250	
Deviation Δ_{dmp}	0 -30		0 -34		0 -40		0 -45		0 -50		0 -75		0 -100		0 -125	
g5	-15 -35	**-15** 2 35	-17 -40	**-18** 1 40	-18 -43	**-22** **0** 43	-20 -47	**-25** 1 47	-22 -51	**-28** **-1** 51	-24 -56	**-51** **-15** 56	-26 -62	**-74** **-29** 62	-28 -70	**-97** **-41** 70
g6	-15 -44	**-15** 5 44	-17 -49	**-18** 4 49	-18 -54	**-22** 3 54	-20 -60	**-25** 3 60	-22 -66	**-28** 4 66	-24 -74	**-51** **-9** 74	-26 -82	**-74** **-24** 82	-28 -94	**-97** **-33** 94
h5	0 -20	**-30** **-13** 20	0 -23	**-35** **-16** 23	0 -25	**-40** **-18** 25	0 -27	**-45** **-21** 27	0 -29	**-50** **-23** 29	0 -32	**-75** **-39** 32	0 -36	**-100** **-55** 36	0 -42	**-125** **-69** 42
h6	0 -29	**-30** **-10** 29	0 -32	**-35** **-13** 32	0 -36	**-40** **-15** 36	0 -40	**-45** **-17** 40	0 -44	**-50** **-18** 44	0 -50	**-75** **-33** 50	0 -56	**-100** **-48** 56	0 -66	**-125** **-61** 66
j5	+7 -13	**-37** **-20** 13	+7 -16	**-42** **-23** 16	+7 -18	**-47** **-25** 18	+7 -20	**-52** **-28** 20								
j6	+16 -13	**46** **-26** 13	+16 -16	**-51** **-29** 16	+18 -18	**-58** **-33** 18	+20 -20	**-65** **-37** 20	+22 -22	**-72** **-40** 22	+25 -25	**-100** **-58** 25	+28 -28	**-128** **-76** 28	+33 -33	**-158** **-94** 33
js5	+10 -10	**-40** **-23** 10	+11,5 -11,5	**-47** **-27** 12	+12,5 -12,5	**-53** **-32** 13	+13,5 -13,5	**-59** **-35** 14	+14,5 -14,5	**-65** **-38** 15	+16 -16	**-91** **-55** 16	+18 -18	**-118** **-73** 18	+21 -21	**-146** **-90** 21
js6	+14,5 -14,5	**-45** **-25** 15	+16 -16	**-51** **-29** 16	+18 -18	**-58** **-33** 18	+20 -20	**-65** **-37** 20	+22 -22	**-72** **-40** 22	+25 -25	**-100** **-58** 25	+28 -28	**-128** **-76** 28	+33 -33	**-158** **-94** 33

The bold negative figures in the right hand column denote interference!

Shaft Fits

Nominal shaft diameter **[mm]**
Tolerances are in **[µm]**

Nominal shaft diameter over / incl.	3 / 6		6 / 10		10 / 18		18 / 30		30 / 50		50 / 80		80 / 120		120 / 180	
Deviation Δ_{dmp}	0	-8	0	-8	0	-8	0	-10	0	-12	0	-15	0	-20	0	-25
k5		**-14**		**-15**		**-17**		**-21**		**-25**		**-30**		**-38**		**-46**
	+6	**-9**	+7	**-10**	+9	**-12**	+11	**-15**	+13	**-17**	+15	**-21**	+18	**-26**	+21	**-32**
	+1	**-1**	+1	**-1**	+1	**-1**	+2	**-2**	+2	**-2**	+2	**-2**	+3	**-3**	+3	**-3**
k6		**-17**		**-18**		**-20**		**-25**		**-30**		**-36**		**-45**		**-53**
	+9	**-11**	+10	**-12**	+12	**-14**	+15	**-17**	+18	**-21**	+21	**-25**	+25	**-31**	+28	**-36**
	+1	**-1**	+1	**-1**	+1	**-1**	+2	**-2**	+2	**-2**	+2	**-2**	+3	**-3**	+3	**-3**
m5		**-17**		**-20**		**-23**		**-27**		**-32**		**-39**		**-48**		**-58**
	+9	**-13**	+12	**-15**	+15	**-18**	+17	**-21**	+20	**-24**	+24	**-30**	+28	**-36**	+33	**-44**
	+4	**-4**	+6	**-6**	+7	**-7**	+8	**-8**	+9	**-9**	+11	**-11**	+13	**-13**	+15	**-15**
m6		**-20**		**-23**		**-26**		**-31**		**-37**		**-45**		**-55**		**-65**
	+12	**-15**	+15	**-17**	+18	**-20**	+21	**-23**	+25	**-27**	+30	**-34**	+35	**-42**	+40	**-48**
	+4	**-4**	+6	**-6**	+7	**-7**	+8	**-8**	+9	**-9**	+11	**-11**	+13	**-13**	+15	**-15**
n5		**-21**		**-24**		**-28**		**-34**		**-40**		**-48**		**-58**		**-70**
	+13	**-17**	+16	**-19**	+20	**-23**	+24	**-28**	+28	**-32**	+33	**-39**	+38	**-46**	+45	**-56**
	+8	**-8**	+10	**-10**	+12	**-12**	+15	**-15**	+17	**-17**	+20	**-20**	+23	**-23**	+27	**-27**
n6		**-24**		**-27**		**-31**		**-38**		**-45**		**-54**		**-65**		**-77**
	+16	**-19**	+19	**-21**	+23	**-25**	+28	**-30**	+33	**-36**	+39	**-43**	+45	**-51**	+52	**-60**
	+8	**-8**	+10	**-10**	+12	**-12**	+15	**-15**	+17	**-17**	+20	**-20**	+23	**-23**	+27	**-27**
p6		**-28**		**-32**		**-37**		**-45**		**-54**		**-66**		**-79**		**-93**
	+20	**-23**	+24	**-26**	+29	**-31**	+35	**-37**	+42	**-45**	+51	**-55**	+59	**-65**	+68	**-76**
	+12	**-12**	+15	**-15**	+18	**-18**	+22	**-22**	+26	**-26**	+32	**-32**	+37	**-37**	+43	**-43**
p7		**-32**		**-38**		**-44**		**-53**		**-63**		**-77**		**-92**		**-108**
	+24	**-25**	+30	**-30**	+36	**-35**	+43	**-43**	+51	**-51**	+62	**-62**	+72	**-73**	+83	**-87**
	+12	**-12**	+15	**-15**	+18	**-18**	+22	**-22**	+26	**-26**	+32	**-32**	+37	**-37**	+43	**-43**

Example: shaft ∅ 100 m5 — upper limit ("**go-side**") +28 µm
lower limit ("**no-go side**") +13 µm
Bearing with standard tolerances (**PN**), deviation Δ_{dmp} = 0 / -20 µm

For shaft ∅ 100 m5:

		-48	interference or clearance if the **go-sides** meet
go-side	+28	**-36**	probable interference or clearance
no-go side	+13	**-13**	interference or clearance if the **no-go sides** meet

The bold negative figures in the right hand column denote interference!

Shaft Fits

Nominal shaft diameter **[mm]**
Tolerances are in **[µm]**

over incl.	180 250		250 315		315 400		400 500		500 630		630 800		800 1000		1000 1250	
Deviation Δ_{dmp}	0 -30		0 -34		0 -40		0 -45		0 -50		0 -75		0 -100		0 -125	
k5	+24 +4	**-54 -37 -4**	+27 +4	**-62 -43 -4**	+29 +4	**-69 -47 -4**	+32 +5	**-77 -53 -5**	+29 0	**-79 -53 0**	+32 0	**-107 -71 0**	+36 0	**-136 -91 0**	+42 0	**-167 -111 0**
k6	+33 +4	**-63 -43 -4**	+36 +4	**-71 -49 -4**	+40 +4	**-80 -55 -4**	+45 +5	**-90 -62 -5**	+44 0	**-94 -62 0**	+50 0	**-125 -83 0**	+56 0	**-156 -104 0**	+66 0	**-191 -127 0**
m5	+37 +17	**-67 -50 -17**	+43 +20	**-78 -59 -20**	+46 +21	**-86 -64 -21**	+50 +23	**-95 -71 -23**	+55 +26	**-105 -78 -26**	+62 +30	**-137 -101 -30**	+70 +34	**-170 -125 -34**	+82 +40	**-207 -151 -40**
m6	+46 +17	**-76 -56 -17**	+52 +20	**-87 -65 -20**	+57 +21	**-97 -72 -21**	+63 +23	**-108 -80 -23**	+70 +26	**-120 -88 -26**	+80 +30	**-155 -113 -30**	+90 +34	**-190 -138 -34**	+106 +40	**-231 -167 -40**
n5	+51 +31	**-81 -64 -31**	+57 +34	**-92 -73 -34**	+62 +37	**-102 -80 -37**	+67 +40	**-112 -88 -40**	+73 +44	**-123 -96 -44**	+82 +50	**-157 -121 -50**	+92 +56	**-192 -147 -56**	+108 +66	**-233 -177 -66**
n6	+60 +31	**-90 -70 -31**	+66 +34	**-101 -79 -34**	+73 +37	**-113 -88 -37**	+80 +40	**-125 -97 -40**	+88 +44	**-138 -106 -44**	+100 +50	**-175 -133 -50**	+112 +56	**-212 -160 -56**	+132 +66	**-257 -193 -66**
p6	+79 +50	**-109 -89 -50**	+88 +56	**-123 -101 -56**	+98 +62	**-138 -113 -62**	+108 +68	**-153 -125 -68**	+122 +78	**-172 -140 -78**	+138 +88	**-213 -171 -88**	+156 +100	**-256 -204 -100**	+186 +120	**-311 -247 -120**
p7	+96 +50	**-126 -101 -50**	+108 +56	**-143 -114 -56**	+119 +62	**-159 -127 -62**	+131 +68	**-176 -139 -68**	+148 +78	**-198 -158 -78**	+168 +88	**-243 -199 -88**	+190 +100	**-290 -227 -100**	+225 +120	**-350 -273 -120**

The bold negative figures in the right hand column denote interference!

Housing Fits

Nominal diameter of housing bore **[mm]**
Tolerances are in **[µm]**

Nominal housing borer over / incl.	6 / 10		10 / 18		18 / 30		30 / 50		50 / 80		80 / 120		120 / 150		150 / 180	
Deviation Δ_{Dmp}	0	-8	0	-8	0	-9	0	-11	0	-13	0	-15	0	-18	0	-25
F7		13		16		20		25		30		36		43		43
	+28	21	+34	25	+41	30	+50	37	+60	44	+71	53	+83	62	+83	64
	+13	36	+16	42	+20	50	+25	61	+30	73	+36	86	+43	101	+43	108
G6		5		6		7		9		10		12		14		14
	+14	11	+17	12	+20	14	+25	18	+29	21	+34	24	+39	28	+39	31
	+5	22	+6	25	+7	29	+9	36	+10	42	+12	49	+14	57	+14	64
G7		5		6		7		9		10		12		14		14
	+20	13	+24	15	+28	17	+34	21	+40	24	+47	29	+54	33	+54	36
	+5	28	+6	32	+7	37	+9	45	+10	53	+12	62	+14	72	+14	79
H6		**0**		**0**		**0**		**0**		**0**		**0**		**0**		**0**
	+9	6	+11	6	+13	7	+16	9	+19	11	+22	12	+25	14	+25	17
	0	17	0	19	0	22	0	27	0	32	0	37	0	43	0	50
H7		**0**		**0**		**0**		**0**		**0**		**0**		**0**		**0**
	+15	8	+18	9	+21	10	+25	12	+30	14	+35	17	+40	19	+40	22
	0	23	0	26	0	30	0	36	0	43	0	50	0	58	0	65
H8		**0**		**0**		**0**		**0**		**0**		**0**		**0**		**0**
	+22	10	+27	12	+33	14	+39	17	+46	20	+54	23	+63	27	+63	29
	0	30	0	35	0	42	0	50	0	59	0	69	0	81	0	88
J6		**-4**		**-5**		**-5**		**-6**		**-6**		**-6**		**-7**		**-7**
	+5	2	+6	1	+8	2	+10	3	+13	5	+16	6	+18	7	+18	10
	-4	13	-5	14	-5	17	-6	21	-6	26	-6	31	-7	36	-7	43
J7		**-7**		**-8**		**-9**		**-11**		**-12**		**-13**		**-14**		**-14**
	+8	1	+10	1	+12	1	+14	1	+18	2	+22	4	+26	5	+26	8
	-7	16	-8	18	-9	21	-11	25	-12	31	-13	37	-14	44	-14	51
JS6		**-4,5**		**-5,5**		**-6,5**		**-8**		**-9,5**		**-11**		**-12,5**		**-12,5**
	+4,5	2	+5,5	1	+6,5	**0**	+8	1	+9,5	**0**	+11	1	+12,5	1	+12,5	3
	-4,5	12,5	-5,5	13,5	-6,5	15,5	-8	19	-9,5	22,5	-11	26	-12,5	30,5	-12,5	37,5

Example: Housing ∅ **120 H6** upper limit ("**no - go side**") +22 µm
lower limit ("**go - side**") 0 µm
Bearing with standard tolerances (**PN**), tolerance of outer ∅deviation Δ_{Dmp} = 0 / -15 µm

Housing ∅ **120 H6**:

		0
no-go side	+22	**12**
go-side	0	**37**

interference or clearance if the **go-sides** meet
probable interference or clearance
interference or clearance if the **no-go sides** meet

Housing Fits

Nominal diameter of housing bore **[mm]**
Tolerances are in **[µm]**

over incl.	180 250		250 310		310 400		400 500		500 630		630 800		800 1000		1000 1250		1250 1600	
Deviation Δ_{Dmp}	0 -30		0 -35		0 -40		0 -45		0 -50		0 -75		0 -100		0 -125		0 -160	
F7		50		56		62		68		76		80		86		98		110
	+96	75	+108	85	+119	94	+131	104	+146	116	+160	132	+176	149	+203	175	+235	205
	+50	126	+56	143	+62	159	+68	176	+76	196	+80	235	+86	276	+98	328	+110	395
G6		15		17		18		20		22		24		26		28		30
	+44	35	+49	39	+54	43	+60	48	+66	54	+74	66	+82	78	+94	93	+108	109
	+15	74	+17	84	+18	94	+20	105	+22	116	+24	149	+26	182	+28	219	+30	268
G7		15		17		18		20		22		24		26		28		30
	+61	40	+69	46	+75	50	+83	56	+92	62	+104	76	+116	89	+133	105	+155	125
	+15	91	+17	104	+18	115	+20	128	+22	142	+24	179	+26	216	+28	258	+30	315
H6		**0**		**0**		**0**		**0**		**0**		**0**		**0**		**0**		**0**
	+29	20	+32	22	+36	25	+40	28	+44	32	+50	42	+56	52	+66	64	+78	79
	0	59	0	67	0	76	0	85	0	94	0	125	0	156	0	191	0	238
H7		**0**		**0**		**0**		**0**		**0**		**0**		**0**		**0**		**0**
	+46	25	+52	29	+57	32	+63	36	+70	40	+80	52	+90	63	+105	77	+125	95
	0	76	0	87	0	97	0	108	0	120	0	155	0	190	0	230	0	285
H8		**0**		**0**		**0**		**0**		**0**		**0**		**0**		**0**		**0**
	+29	20	+32	22	+36	25	+40	28	+44	32	+50	42	+56	52	+66	64	+78	79
	0	59	0	67	0	76	0	85	0	94	0	125	0	156	0	191	0	238
J6		**-7**		**-7**		**-7**		**-7**										
	+22	13	+25	15	+29	18	+33	21										
	-7	52	-7	60	-7	69	-7	78										
J7		**-16**		**-16**		**-18**		**-20**										
	+30	9	+36	13	+39	14	+43	16										
	-16	60	-16	71	-18	79	-20	88										
JS6		**-14,5**		**-16**		**-18**		**-20**		**-22**		**-25**		**-28**		**-33**		**-39**
	+14,5	5	+16	7	+18	6	+20	8	+22	10	+25	17	+28	24	+33	31	+39	40
	-14,5	44,5	-16	51	-18	58	-20	65	-22	72	-25	100	-28	128	-33	158	-39	199

The bold negative figures in the right hand column denote interference!

Housing Fits

Nominal diameter of housing bore **[mm]**
Tolerances are in **[µm]**

Nominal housing borer	over incl.	6 10		10 18		18 30		30 50		50 80		80 120		120 150		150 180	
Deviation Δ_{Dmp}		0 -8		0 -8		0 -9		0 -11		0 -13		0 -15		0 -18		0 -25	
JS7		+7,5 -7,5	**-7,5** 1 15,5	+9 -9	**-9** **0** 17	+10,5 -10,5	**-10,5** **-1** 19,5	+12,5 -12,5	**-12,5** **-1** 23,5	+15 -15	**-15** **-1** 28	+17,5 -17,5	**-17,5** **-1** 32,5	+20 -20	**-20** 1 38	+20 -20	**-20** 1 45
K6		+2 -7	**-7** **-1** 10	+2 -9	**-9** **-3** 10	+2 -11	**-11** **-4** 11	+3 -13	**-13** **-4** 14	+4 -15	**-15** **-4** 17	+4 -18	**-18** **-6** 19	+4 -21	**-21** **-7** 22	+4 -21	**-21** **-4** 29
K7		+5 -10	**-10** **-2** 13	+6 -12	**-12** **-3** 14	+6 -15	**-15** **-5** 15	+7 -18	**-18** **-6** 18	+9 -21	**-21** **-7** 22	+10 -25	**-25** **-8** 25	+12 -28	**-28** **-9** 30	+12 -28	**-28** **-6** 37
M6		-3 -12	**-12** **-6** 5	-4 -15	**-15** **-9** 4	-4 -17	**-17** **-10** 5	-4 -20	**-20** **-11** 7	-5 -24	**-24** **-13** 8	-6 -28	**-28** **-16** 9	-8 -33	**-33** **-19** 10	-8 -33	**-33** **-16** 17
M7		0 -15	**-15** **-7** 8	0 -18	**-18** **-9** 8	0 -21	**-21** **-11** 9	0 -25	**-25** **-13** 11	0 -30	**-30** **-16** 13	0 -35	**-35** **-18** 15	0 -40	**-40** **-21** 18	0 -40	**-40** **-18** 25
N6		-7 -16	**-16** **-10** 1	-9 -20	**-20** **-14** **-1**	-11 -24	**-24** **-17** **-2**	-12 -28	**-28** **-19** **-1**	-14 -33	**-33** **-22** **-1**	-16 -38	**-38** **-26** **-1**	-20 -45	**-45** **-31** **-2**	-20 -45	**-45** **-28** **5**
N7		-4 -19	**-19** **-11** 4	-5 -23	**-23** **-14** 3	-7 -28	**-28** **-18** 2	-8 -33	**-33** **-21** 3	-9 -39	**-39** **-25** 4	-10 -45	**-45** **-28** 5	-12 -52	**-52** **-33** 6	-12 -52	**-52** **-30** 13
P6		-12 -21	**-21** **-15** **-4**	-15 -26	**-26** **-20** **-7**	-18 -31	**-31** **-24** **-9**	-21 -37	**-37** **-28** **-10**	-26 -45	**-45** **-34** **-13**	-30 -52	**-52** **-40** **-15**	-36 -61	**-61** **-47** **-18**	-36 -61	**-61** **-44** **-11**
P7		-9 -24	**-24** **-16** **-1**	-11 -29	**-29** **-20** **-3**	-14 -35	**-35** **-25** **-5**	-17 -42	**-42** **-30** **-6**	-21 -51	**-51** **-37** **-8**	-24 -59	**-59** **-42** **-9**	-28 -68	**-68** **-49** **-10**	-28 -68	**-68** **-46** **-3**

Example: Housing ∅ **160 M6** upper limit ("**no-go side**") - 8 µm
lower limit ("**go-side**") -33 µm
Bearing with standard tolerances (**PN**), tolerance of outer ∅deviation Δ_{Dmp} = 0 / -25 µm

Housing ∅ **160 M6**:

		-33	interference or clearance if the **go-sides** meet
no-go side	-8	**-16**	probable interference or clearance
go-side	-33	**17**	interference or clearance if the **no-go sides** meet

Housing Fits

Nominal diameter of housing bore **[mm]**
Tolerances are in **[µm]**

over incl.	180 250		250 310		310 400		400 500		500 630		630 800		800 1000		1000 1250		1250 1600	
Deviation Δ_{Dmp}	0 -30		0 -35		0 -40		0 -45		0 -50		0 -75		0 -100		0 -125		0 -160	
JS7	+23 -23	**-23** 2 53	+26 -26	**-26** 3 61	+28,5 -28,5	**-28,5** 3 68,5	+31,5 -31,5	**-31,5** 4 76,5	+35 -35	**-35** 5 85	+40 -40	**-40** 12 115	+45 -45	**-45** 18 145	+52 -52	**-52** 24 177	+62 -62	**-62** 32 222
K6	+5 -24	**-24** **-4** 35	+5 -27	**-27** **-5** 40	+7 -29	**-29** **-4** 47	+8 -32	**-32** **-4** 53	0 -44	**-44** **-12** 50	0 -50	**-50** **-8** 75	0 -56	**-56** **-4** 100	0 -66	**-66** **-2** 125	0 -78	**-78** **1** 160
K7	+13 -33	**-33** **-8** 43	+16 -36	**-36** **-7** 51	+17 -40	**-40** **-8** 57	+18 -45	**-45** **-9** 63	0 -70	**-70** **-30** 50	0 -80	**-80** **-28** 75	0 -90	**-90** **-27** 100	0 -105	**-105** **-28** 125	0 -125	**-125** **-30** 160
M6	-8 -37	**-37** **-17** 22	-9 -41	**-41** **-19** 26	-10 -46	**-46** **-21** 30	-10 -50	**-50** **-22** 35	-26 -70	**-70** **-38** 24	-30 -80	**-80** **-38** 45	-34 -90	**-90** **-38** 66	-40 -106	**-106** **-45** 85	-48 -126	**-126** **-47** 112
M7	0 -46	**-46** **-21** 30	0 -52	**-52** **-23** 35	0 -57	**-57** **-25** 40	0 -63	**-63** **-27** 45	-26 -96	**-96** **-56** 24	-30 -110	**-110** **-58** 45	-34 -124	**-124** **-61** 66	-40 -145	**-145** **-68** 85	-48 -173	**-173** **-78** 112
N6	-22 -51	**-51** **-31** 8	-25 -57	**-57** **-35** 10	-26 -62	**-62** **-37** 14	-27 -67	**-67** **-39** 18	-44 -88	**-88** **-56** 6	-50 -100	**-100** **-58** 25	-56 -112	**-112** **-60** 44	-66 -132	**-132** **-67** 59	-78 -156	**-156** **-77** 82
N7	-14 -60	**-60** **-35** 16	-14 -66	**-66** **-37** 21	-16 -73	**-73** **-41** 24	-17 -80	**-80** **-44** 28	-44 -114	**-114** **-74** 6	-50 -130	**-130** **-78** 25	-56 -146	**-146** **-83** 44	-66 -171	**-171** **-94** 59	-78 -203	**-203** **-108** 82
P6	-41 -70	**-70** **-50** **-11**	-47 -79	**-79** **-57** **-12**	-51 -87	**-87** **-62** **-11**	-55 -95	**-95** **-67** **-10**	-78 -122	**-122** **-90** **-28**	-88 -138	**-138** **-96** **-13**	-100 -156	**-156** **-104** **0**	-120 -186	**-186** **-121** **5**	-140 -218	**-218** **-139** **20**
P7	-33 -79	**-79** **-54** **-3**	-36 -88	**-88** **-59** **-1**	-41 -98	**-98** **-66** **-1**	-45 -108	**-108** **-72** **0**	-78 -148	**-148** **-108** **-28**	-88 -168	**-168** **-126** **-13**	-100 -190	**-190** **-127** **0**	-120 -225	**-225** **-148** **5**	-140 -265	**-265** **-159** **20**

The bold negative figures in the right hand column denote interference!

Design of Bearing Seats as Raceways

In several applications it may be advantageous to use roller and cage assemblies only instead of complete bearings.

Typical examples for such application are needle roller bearings without inner rings (RNA-type needle roller bearings), cylindrical roller bearings without inner rings (RNU-type) or without outer rings (RN-type), needle roller and etc., cage assemblies including full complement type arrangements where separate rolling elements such as rollers or bearing needles run directly onto the contacting surfaces of shafts or housings.

It can be seen that such bearing arrangements allow maximum utilisation of available design space. Additionally, the omission of the inner or outer rings enables the maximum shaft or housing sections ensuring a more rigid design arrangement.

In these cases the rolling elements run directly onto the contacting surfaces of the shaft or housing which must fulfil the functions of the omitted bearing ring. Therefore, in order to fulfil these functions correctly the dimensional, geometrical and surface finish accuracy, including the surface hardness values must be to the required bearing standards.

To provide an optimum use of the potential capacity of a bearing the running surfaces must have a hardness of **58** to **64 HRC**.

Also all surfaces supporting axial guidance to the bearing, such as shaft shoulders or contacting surfaces on adjacent parts, have to be similarly heattreated.

Therefore suitable materials for such direct bearing arrangements are hardening steels, (see examples listed in **table 7.11**).

Following the individual specifications of each application either a suitable through hardening steel, case hardening steel or steels for flame or induction hardening with high core tenacity may be selected to manufacture the shafts or housings.

In the case of steels suitable for flame or induction hardening a partial hardening of the running surfaces only is possible which enables economic cost solutions.

But when applying such surface hardening, a certain **minimum case depth** must be considered. As the case depth is dependant upon the application and its operating conditions no specific rules apply to determine this depth, although, **it is generally accepted the minimum case depth must be 10% minimum of the rolling element diameter.**

Steel type	DIN material number	Remark
100Cr6	**1.3505**	through hardening bearing steel
100CrMn6	**1.3520**	through hardening bearing steel
100CrMo73	**1.3536**	through hardening bearing steel
17MnCr5	**1.3521**	case hardening steel
19MnCr5	**1.3523**	case hardening steel
16CrNiMo6	**1.3531**	case hardening steel
42CrMo4-V	**1.7225**	steel for flame or induction hardening
43CrMo4	**1.3563**	steel for flame or induction hardening
48CrMo4	**1.3565**	steel for flame or induction hardening

Table 7.11

Of equal importance is the **form accuracy** of the running surfaces.

The permissible **roundness deviation** for normal expectation of running accuracy must not exceed **20%** of the diameter tolerance of shaft or housing seat.

The **cylindricity deviation** should be less than half these values.

With increasing requirements in the running accuracy of the bearing application the tolerances of cylindricity and rectangularity have to be restricted accordingly.

The **surface roughness** of contacting faces designed as bearing raceways must not exceed a surface roughness of $\mathbf{R_a \leq 0{,}2\ \mu m}$.

If less running accuracy is adequate higher values of surface roughness may be defined.

Diameter Tolerances of Incorporated Raceways

Following the definition of diameter tolerances of bearing raceways, incorporating adjacent machine components the required **bearing clearance** must also be defined.

In the case of separable bearing types, (e.g. needle roller bearings or cylindrical roller bearings) the amount of radial clearance is defined by the raceway diameter of their loose rings.

The diameter tolerance of bearing rings is arranged in such a way that when matched with the tolerance of the diameter under the rollers this gives a certain range of radial clearance values. These values are arranged in clearance groups.

To avoid undesired preloading of the bearings or excessive clearance the tolerances for a certain clearance group must be considered carefully.

Values of clearance groups, including tolerances of diameters under rollers, are listed in the specific product information tables.

Axial Location of Bearing

Whilst rolling bearings, used in various applications, generally have radial location of their shaft and housing seats, they also require certain axial location using the appropriate fits (see **tables 7.7, 7.8, 7.9** and **7.10**).

Where heavy interference fits of shafts or housings provide clamping forces on the bearing seats they do not guarantee axial location in all circumstances.

True axial location of the bearings at their seats is best achieved by means of a closed-form arrangement usually by locking nuts and washers, housing cups, shaft shoulders, snap rings etc. (fig. 7.4) complete.

It is necessary to ensure the design of adjacent parts of the bearing arrangement consider the respective functions of both the locating and non-locating bearings.

For the floating bearing, high thrust loading seldom occurs, however, there is some axial force generated by the shafts thermal expansion. In such cases little effort is required to retain the bearing location axially and a simple solution is to use snap rings etc.

Locating bearings however transmit radial loads, including the acting thrust forces.

As these forces may act in either direction the location and the adjacent parts of the bearing arrangement must be designed accordingly.

Bearings arranged in sets that require adjustment or preloading will take thrust loads alternately, so the shaft is guided in an axial direction by one bearing.

However where the acting thrust force is in one direction only the complete axial location must be for the bearing set.

Examples of Axial Locations of Rolling Bearings

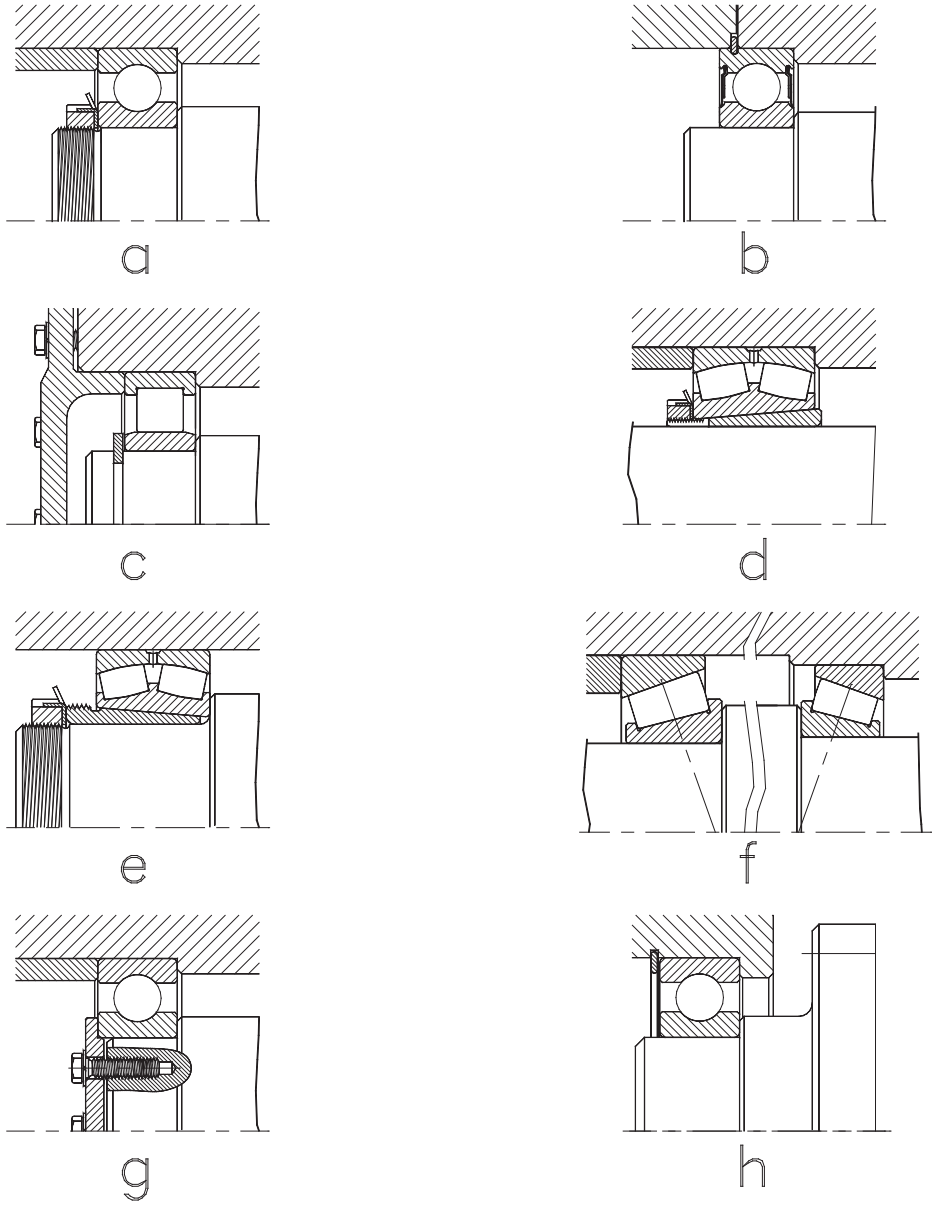

Fig. 7.4

Fig. 7.4a)

Deep groove ball bearing used as a **locating bearing**. Axial location is provided by the housing shoulder and the shaft shoulder and a lock nut, secured by a **locking washer**.

Fig. 7.4b)

Axial location of a **deep groove ball bearing** by means of a **snap ring groove** in the outer ring and housing, fitted with a snap ring.

A very simple and economic method as the bearing and the snap ring make a unit that provides a quick and easy mounting.

For such applications, however, a certain axial play will occur due to the width tolerances of snap ring groove and the snap ring.

Such a location is suitable to accommodate low thrust forces only.

Fig. 7.4c)

Axial location using **shaft snap rings** enable a quick cheap and simple mounting, for applications of mass production.

Fig. 7.4d)

Location of a spherical roller bearing with tapered bore on a plain shaft. The use of adapter sleeves allows shafts of lower class tolerances including turned or cold drawn bars to be used. Additionally the bearing mounting and arrangement construction is reduced. The maximum permissible thrust loads that may be applied to the bearing, however, is limited when using plain shafts without shaft shoulders.

In such cases the maximum applied load is limited by the friction between the contacting surfaces of adapter sleeve bore and shaft.

This is why a shaft shoulder is required when using bearings with adapter sleeves that are exposed to high thrust loads.

Fig. 7.4e)

Location of a spherical roller bearing with tapered bore, using a withdrawal sleeve.

Such a measure also enables the simplification of bearing seats and provides easier mounting and dismounting of the bearings. This type of location allows the use of lower class tolerances than for bearings mounted directly onto shafts. The bearing inner ring must be supported by an abutment face (i.e. shaft shoulder).

In cases where for strengthening reasons the shafts corner fillet clearance is larger than that of the bearing it may be necessary to fit a distance ring.

In all cases the withdrawal sleeve is secured against axial displacement by using a shaft nut or end plate.

Fig. 7.4f)

Tapered roller bearings located in face-to-face arrangement. These bearings take the thrust loads alternately, so axial location is only necessary in one direction.

At the design stage of such arrangements consideration must be taken to allow for adjustment of the bearings.

Fig. 7.4g)

Deep groove ball bearing as locating bearing. The axial location in the housing is secured by the housing shoulder and, on the shaft by the shaft shoulder and an **end plate** bolted onto the shaft end.

A relative costly arrangement.

Fig. 7.4h)

Cross-located deep groove ball bearings. The axial location in the housing is secured by each housing shoulder and a standardised **locking ring**.

Such a location is suitable for bearing arrangements without special requirements for axial guidance accuracy.

Abutment and Fillet Dimensions

The diameter of connecting parts, such as adjacent shaft collars, housing shoulders and distance rings, must be defined according to the individual guide lines relevant for each bearing type and size.

Recommendations for abutment and fillet dimensions are given in the product information tables.

The consideration of these values guarantees sufficient axial support of bearing rings enabling the bearing load ratings use in an optimum way. These values also consider salient features of each bearing type, such as cage protrusion of some tapered roller bearings.

Bearing ring forces may only contact their axial supporting surfaces.

The bearing corners must always be clear of the shaft and housing fillet radii.

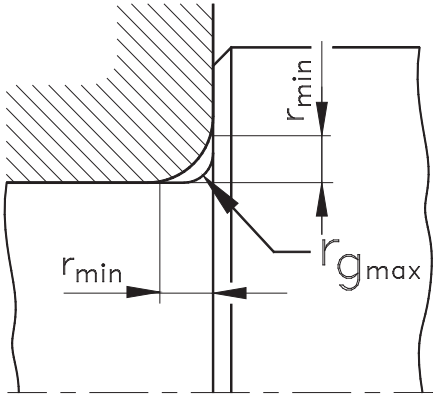

Fig. 7.5

where:

r_{min} = minimum chamfer on bearing ring (see product information tables)

r_{gmax} = maximum fillet radius on shaft or housing

If for strength reasons, (e.g. for a reduction of the notch effect on high loaded gearbox shafts,) larger fillet radii become necessary adequate shaped **distance rings** must be used between shaft shoulder and bearing side face, (fig. 7.6).

The diameters for these rings have to be defined in such a way, that sufficient axial support of the bearing is provided.

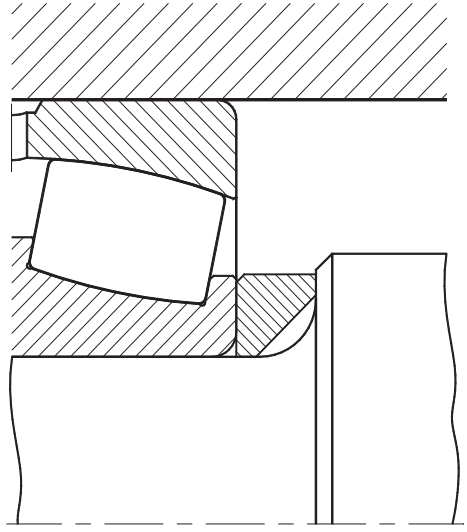

Fig. 7.6

In some cases the shaft and housing fillet corners may be “undercuts”, in each case consideration must be taken to ensure correct face abutments (fig. 7.7).

For recommended “undercut” dimensions and form values (table 7.12).

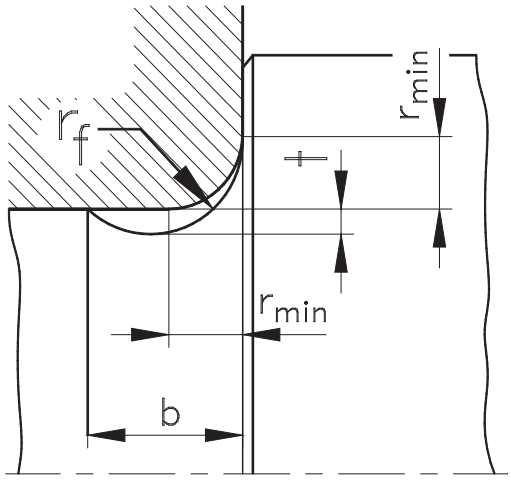

Fig. 7.7

where:

r_{min} = minimum chamfer dimension onbearing ring (see product information tables)

r_f = maximum undercut fillet radius onshaft or housing.

b = width of undercut

t = depth of undercut

Minimum chamfer dimension r_{min} [mm]	Undercut dimensions [mm]		
	b	t	r_f
1	2	0,2	1,3
1,1	2,4	0,3	1,5
1,5	3,2	0,4	2
2	4	0,5	2,5
2,1	4	0,5	2,5
3	4,7	0,5	3
4	5,9	0,5	4
5	7,4	0,6	5
6	8,6	0,6	6
7,5	10	0,6	7

Table 7.12

Design Measures for Bearing Monitoring and Dismounting

Depending upon the individual design arrangements for specific bearing applications dismounting may be more or less frequent. It is reasonable to suggest some thought on this matter at the initial design stages.

In many cases mounting or dismounting of rolling bearings may be less complicated with very simple design measures, such as **dismounting threads** or dismounting **holes** drilled into housing shoulders to push out the bearings from their housing seats, or **dismounting slots**, **recesses** or **undercuts** to ease bearing dismounting, using the appropriate mechanical or hydraulic tools (e.g. claw pullers etc.) in this way the machine and plant maintenance is simple and effective.

For larger machines or more important parts of the plant or machines that fulfil key functions, bearing locations sometimes are the subject of a special condition **monitoring**.

Examples for such monitoring include paper mills, power plants and steel mills.

Such monitoring may be done, according to the importance of the machine or plant, either by regular manual measurements in the simplest form or by stationary mounted sensors that have been connected on-line to a central computer that evaluates the data.

Such bearing condition monitoring records operational variations, to specific design parameters, that may indicate changes in the bearing condition arrangement or impending breakdown. These elements of a bearings condition are temperature, vibration velocity, vibration acceleration and running noise.

Irrespective of the methods, the location of measuring points should be applied as close to the bearings as possible.

This usually becomes easier when provision for, if required, threads, holes or connection facilities are already fixed.

Sealing of Bearing Arrangements

General

Rolling bearings are high precision machine elements that are produced with tolerances of close microns [**µm**].

For an optimum function they have super finished running surfaces featuring surface roughness of some 10th microns (**0,1 µm**).

This is why rolling bearings are very sensitive to damage caused by solid contaminations and impurities.

The efficient sealing of a bearing arrangement is thus one of the major pre-conditions for the successful performance of a rolling bearing arrangement.

Seal Types

In the field of bearing sealing there are many proven designs and design variations. To provide the optimum solution for each application and specific problems this practical experience should always be considered.

For rotary movement, **dynamic seals** are usually used for sealing bearing arrangements.

To satisfy the specific problems for each application there are in principle two main differences, namely.

- **non-contacting** seals
- **contacting (rubbing)** seals

For some applications it may become necessary to combine both types.

Non-Contacting Seals

The principle function of non-contacting seals is based on the sealing effect of narrow gaps between stationary and rotating machine components.

In their simplest form, non-contacting seals are simple, straight gaps as shown in fig. 7.9a. Their effectiveness may be increased by design improvements up to complex shaped labyrinth seals.

Gap seals do not have any contacting parts, they generate practically no friction and thus no wear which make this type suitable for high speed operations.

The **width** of sealing gap should be approximately **0,1 ÷ 0,3 mm**, according to the accuracy of shaft guidance and dependant upon the bearing size.

Some compensation of alignment errors between shaft and housing may be possible based on the seal arrangement to be used, particularly for self aligning bearing types (e.g. ball bearings and/or spherical roller bearing).

A significant improvement in the effectiveness of a gap seal may be achieved by **grease filling** of the sealing gaps. By this measure the penetration of fine dust particles may be avoided.

A higher efficiency of sealing may also be achieved by a combination of non-contacting seals with sealed or shielded bearings, (suffixes -**Z, -2Z, -RS, -2RS, -RS2, -2RS2, - 2LFS**).

For variations of non-contacting seals, (see fig 7.8).

Fig. 7.8a)
A straight gap between shaft and housing cover builds the simplest form of a **gap seal**. Suitable for grease lubricated bearing applications running under dry surroundings where less dust may occur.

Examples for Non-Contacting Seals of Bearing Arrangements

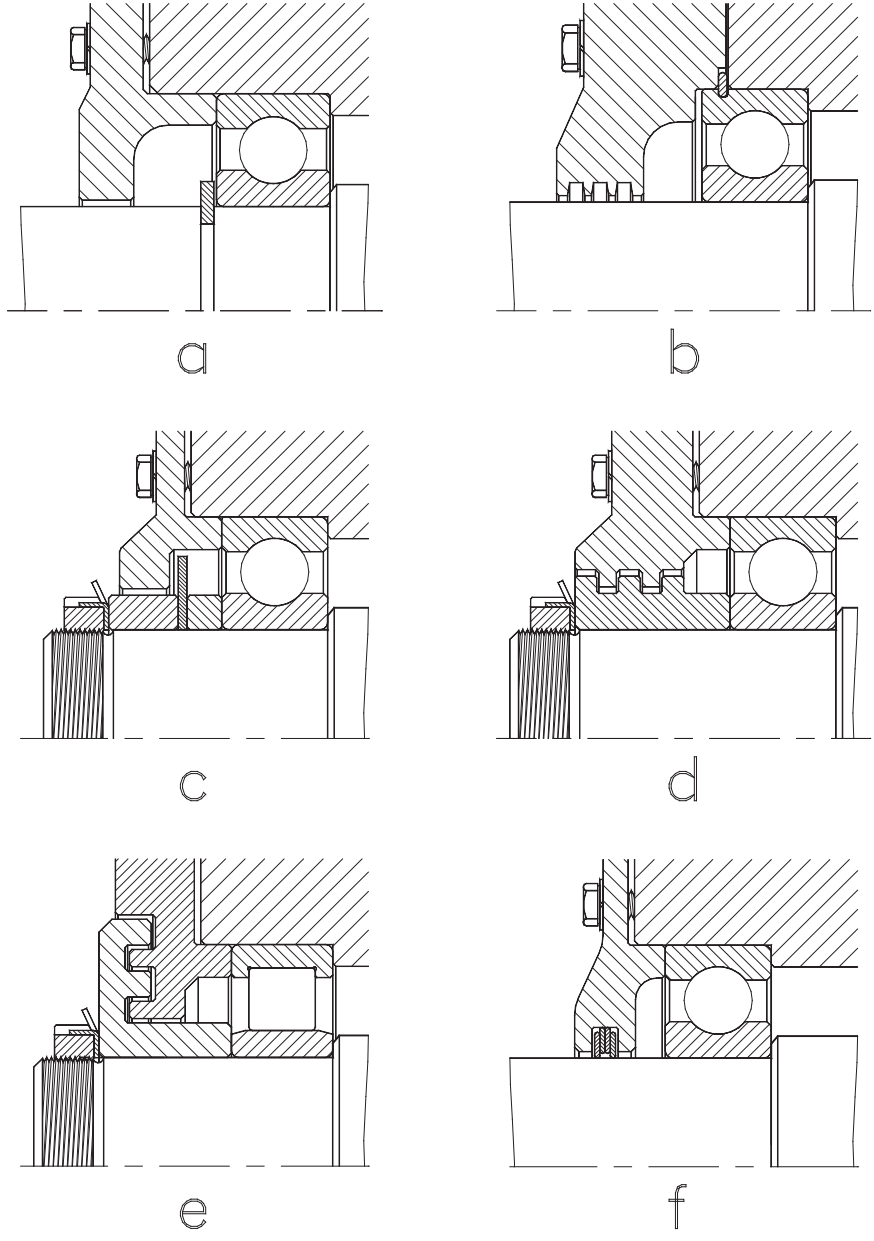

Fig. 7.8

Fig. 7.8b)

Non-contacting seal with additional concentric **grooves in housing**. A grease filling applied to these grooves prevents penetration of solid contaminations into the bearing position. The efficiency of the sealing is considerably enhanced.

In the case of oil lubrication such grooves may be applied in a helical pattern left hand or right hand depending on the direction of shaft rotation.

Due to the design of the grooves emerging oil will be circulated back into the bearing position.

Fig. 7.8c)

Simple **gap seal** with additional **washer**. These disk washers rotate with the shaft and avoid the penetration of larger impurities.

Fig. 7.8d)

Example of a **radially split labyrinth seal**. The labyrinth is filled with grease and reliably avoids contamination of the bearing position.

Generally labyrinth seals perform well where applications are exposed to contamination such as sand and dust, although they have limited success against splashed water.

To improve their efficiency in the presence of water or humidity the labyrinth should be periodically regreased with water insoluble grease.

Fig. 7.8e)

Labyrinth seal, axially split. Other features as described in fig. 7.8d).

Fig. 7.8f)

Sealing by **lamellar rings**. These are ready for use rings made from spring steel that provide good sealing properties when mounted in sets. The rings have a tension against each other to form a gap seal.

Lamellar rings provide efficient and very economic gap seals.

Contacting Seals

In the case of **contacting seals** (rubbing seals) the sealing effect is achieved by an elastic sealing element touching the mating surface under some preload.

Such contact enables a considerably higher efficiency of sealing compared to non-contacting seals. On the other hand, each contact of rotating components generate some friction and therefore causes additional heat that must been dissipated. All contacting seals depending on the material and their specific design experience wear at differing levels. This has an influence on the permissible speeds and temperature during operational performance.

Please refer to the recommendations supplied by the seal manufacturer.

Fig. 7.9 shows examples of contacting seals:

Fig. 7.9a)

Felt seals provide simple and inexpensive, efficient seals for general application purposes. Felts are commonly used in the form of **felt rings** and **strips** that are inserted into the sealing grooves of bearing housings. Before fitting felt strip seals they should be saturated with machine oil. Felt seals provide a good seal for grease lubricated bearing arrangements even in the presence of dust.

To ensure optimum seal function the mating surface must be ground to a surface roughness not exceeding Ra values of 3.2 µm.

The maximum permissible misalignment for felt seals equals approximately 0,5°.

Examples for Contacting Seals

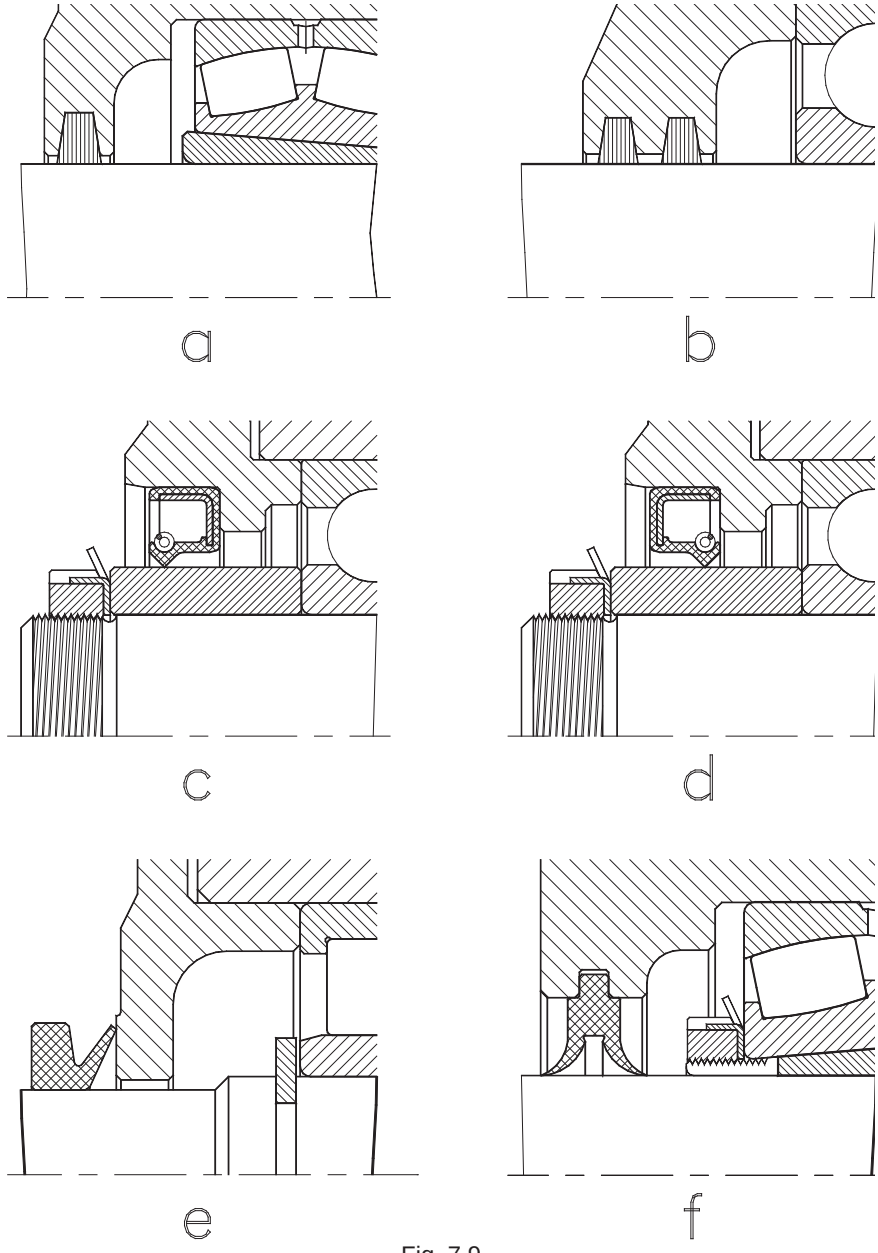

Fig. 7.9

Fig. 7.9b)

Double felt seal. For stronger contamination, especially in the presence of heavy dust, double felt seal arrangement may be used to increase the sealing effectiveness.

Fig. 7.9c) and Fig. 7.9d)

Radial oil seals are standardised machine elements. They are available in a wide variety of different designs and materials to meet the given requirements in an optimum way. In the majority of designs the radial sealing lip is pressed against the sealing surface by a garter belt.

Radial oil seals must be arranged depending on their main purpose. If the radial oil seal is used with the sealing lip facing outwards, as shown in Fig. 7.9c), the entry of contamination particles will be avoided. However, where leaking oil or grease must be avoided the radial oil seal must be mounted with its sealing lip inwards, see fig. 7.9d).

For applications where both are required either a special radial oil seal having double sealing lips may be used or two single radial oil seals located with their sealing lips arranged facing each other outwards.

Radial oil seals are suitable - depending on their individual design and material - for circumferential speeds up to 15 metres/ second. They are also produced in several variations, such as special high temperature resistant materials, with garter springs in stainless steel, multiple sealing lips, etc.

For more detailed information please refer to the individual manufacturer's data sheets.

Fig. 7.9e)

V-ring seals are mounted onto the shaft which rotates whilst the long sealing lip contacts under light preload on the mating face of the stationary machine part.

In cases where the design of the housing as a mating face is not possible or uneconomical, a special sealing washer may be used.

V-ring seals provide good sealing for both oil and grease lubrication even under difficult operation conditions and feature simple mounting.

They also permit, depending on each shaft diameter, certain misalignments between bearing shaft and housing:

Shaft diameter [mm]		Maximum permissible misalignment
>	≤	
--	50	≤ 1,5°
50	150	≤ 1°

Table 7.13

V-ring seals are suitable for circumferential speeds up to 12 m/s without special measures but they should have an axial location if operating at speeds of more than 7 m/s. Such axial location may be achieved by means of locating rings etc.

Where V-ring seals have to operate at circumferential speeds exceeding 12 m/s the lifting of the ring by circumferential forces must be avoided by using supporting rings, such as pressed steel rings etc.

For special applications V-rings are also available in different materials, such as flour fluoropolymer (**FPM**) etc.

Fig. 7.9f)

Split bearing housings are frequently used with two-lip seals as shown in fig. 7.9f).

These seals are available in individual size to fit the split housings. Two-lip seals are made from polyurea and they are radially split which makes their mounting very easy.

The space between their sealing lips has to be filled with grease during mounting.

Two-lip seals are mainly used for the sealing of grease lubricated split pillow block bearing housing.

Two-lip seals also permit certain misalignments depending on their size.

Shaft diameter [mm]		Maximum permissible misalignment
>	≤	
--	100	≤ 1°
100	--	≤ 0,5°

Table 7.14

For optimum sealing performance the mating faces should be ground. They should have a surface roughness not exceeding **Ra ≤ 3,2 µm**.

Two-lip seals are suitable for circumferential speeds not exceeding 8 metres/second.

Within the limited space of this catalogue a detailed listing of all possible sealing types and variations is not possible.

Several seal variations are available as stock items offered by specialist manufacturers.
Examples for further sealing types are:

- sheet steel seals (“NILOS”-rings)
- slide ring packing
- lamellar ring seals from sheet steel
- labyrinth seals
- O-ring seals
- etc.

Combination of Different Sealing Types

In their practical use different sealing types are often combined to enhance the sealing effectiveness.

According to the existing requirements non-contacting seals are often arranged with additional contacting seals.

A very efficient improvement of the seal is provided by using sealed or shielded bearings in combination with the other seals of the bearing position.

Such bearings which incorporate shields or seals (suffixes **Z, -2Z, RS2, -2RS2, RS, -2RS, RSR, -2RSR, -2LFS** etc.) enable maintenance-free sealed bearing arrangements that require minimum space (fig. 7.10).

The effort necessary for the sealing of bearing arrangements may be kept relatively small for high sealing efficiency.

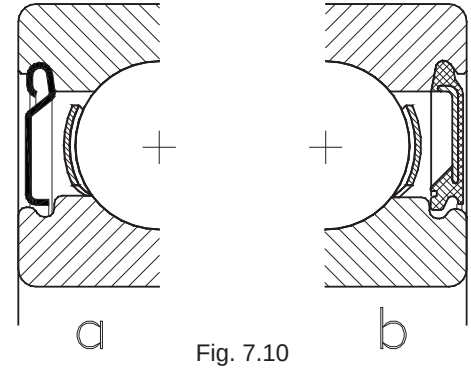

Fig. 7.10

7.10a) Deep groove ball bearing with **Z**-shield. The pressed steel shield forms a simple non contacting gap seal around the circumference of inner ring.

7.10b) Contacting **RS2**-type seal on deep groove ball bearings. In this variant the sealing lip contacts the ground inner ring around the shoulder circumference.

General

The term “clearance” is briefly described as the distance that bearing components may move relative to each other at physical extremes.

Depending upon the bearing type the bearing internal clearance is defined either in radial direction (**radial clearance**) or in **axial** direction (**axial clearance**), (fig. 8.1).

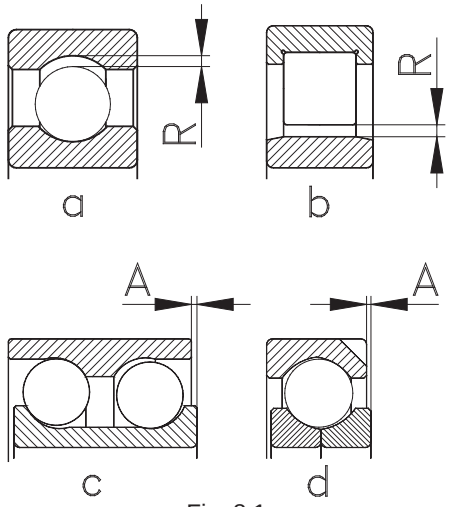

Fig. 8.1

8.1a) **radial clearance “R”** in the case of deep groove ball bearings.

8.1b) **radial clearance “R”** for NU type cylindrical roller bearing. In the case of separable cylindrical roller bearings the radial clearance is defined by the raceway diameter of their loose ring.

8.1c) **axial clearance “A”** of a double row angular contact ball bearing.

8.1d) **axial clearance “A”** of four point ball bearings.

Nominal Internal Bearing Clearance and Operational Clearance

In principle, we have to distinguish between the initial **nominal clearance** of a bearing and its **operation clearance**.

Nominal Clearance

The **nominal clearance** is the initial clearance of a new, unfitted without any external load applied.

For the most common bearing sizes clearance values are defined by DIN standard **DIN 620**.

These defined values of standard clearance (**clearance group “CN”, formerly also called “C0”**) are defined in such a way that bearings will have sufficient remaining operating clearance when “normal” operating conditions apply and the bearings are mounted with “normal” shaft and housing fits.

bearing type	bearing fits for	
	shaft	housing
ball bearing	h5, j5, k5	H6, J6, J7
roller bearing	k5, m5	H7, M7
needle bearing	k5, m5	H7, M7

Table 8.1

“Normal” operating conditions:

- temperature differences between inner and outer ring **≤ 10° C (≤ H 50° C)**
- normal quality standard of running accuracy and precision of shaft guidance
- normal loads
- no strong vibrations or shock loads

For specific applications where it is unsuitable to use the recommendations of DIN620 for “normal” class clearances, different clearance groups may be obtained.

To meet the requirements of such applications, rolling bearings are manufactured in different clearance groups.

Clearance groups:

C1 clearance range smaller than C2

C2 clearance range smaller than CN

CN (C0) “normal” clearance

This clearance group is defined as the standard. Thus **CN** is not marked on the bearings. Historically the standard clearance was designated as “**C0**“.

C3 clearance range larger than CN

C4 clearance range larger than C3

C5 clearance range larger than C4

Special clearance:

For applications that have specific demands not covered by the standard clearance groups or where bearings with standard clearances do not perform optimum, specific clearances may be determined and agreed.

To distinguish these special clearances from the standard ones the clearance values are stated in the bearing designation, unless it already has a special quality definition.

Examples:

R80&150 Special **Radial** clearance of 80 to 150 microns (µm)

A70&110 Special **Axial** clearance of 70 to 110 microns (µm)

If required, the nominal clearance may also be reduced to a certain part within a clearance group.

Such a restriction is indicated by a letter (**H**, **M** or **L**), that follows the symbol of the respective clearance group.

Examples:

C2L clearance range reduced to the **Lower half** of the **C2** clearance group.

C3M clearance range restricted to the **Middle half** of the **C3** clearance group.

C4H clearance range restricted to the **Upper half** of the **C4** clearance group.

The nominal values of each clearance group are listed in the specific product data sheets in the product tables.

Operational Clearance

Unlike the manufactured **nominal clearance groups**, the operation clearance is determined by the individual operating parameters.

The term “**operational clearance**” describes the **operational play** of a mounted, loaded bearing at operating temperature.

Tight shaft fits (interference fit) may expand the inner ring diameter while interference housing fit may lead to contraction of the outer ring.

Also temperature differences between shaft (inner ring) and housing (outer ring) may result in an additional reduction of the initial clearance.

Therefore, in cases where the operational conditions differ from the standard values, the influence of these other factors on the standard value “**CN**” must be considered in detail.

Influence of Bearing Fits

Rolling bearings are located in their positions by the bearing fits. Depending upon type and size of the applied load and the individual function of the bearing either as a locating or non-locating bearing the fits may be chosen more or less tight.

For general machinery applications the most frequent bearing fits are tabulated in the chapter "**Design of Bearing Arrangements**", pages 320 to 327 inclusive.

These tables also contain some additional information about the effect that a certain fit will probably have on a bearing.

For each tolerance both the upper and lower **dimensional limits** in microns [**µm**] are stated in the **left half** of each field. The **three figures** stated in the right half of each tolerance field, however, show how this tolerance field will affect the bearing seat.

As an example, for a shaft with a nominal diameter ∅75 mm and a fit according to the tolerance field j5 the following data is shown:

	-21
+6	**-12**
-7	7

<u>Bold negative</u> figures in the each right half of a field mean interference!

The tolerance of a bearing of standard tolerance class (**PN**) and a bore diameter **∅75**:

$$\Delta_{dmp} = 0 / -15 \text{ µm}$$

If these both meet the following values result:

a) **Maximum interference**

The **maximum <u>interference</u>** occurs when the **largest permissible shaft diameter** meets the **smallest permissible bearing bore**.

In the above example the value of maximum **<u>interference</u>** is,

I(+6) + (-15)I = **-21 µm** (upper value)

Note: The minus sign indicates interference!

b) **Smallest interference**

The **smallest interference** occurs when the **smallest** permissible **shaft** meets the **largest permissible bearing bore**.
In the above example:

I-7 + 0I = 7 **µm <u>play</u>** (lower value)

c) **Probable interference**

The **probable** interference assumes the actual dimensions to lie 1/3rd of the tolerance value from the tolerance go-side.
In the above example:

-12 **µm <u>interference</u>** (mid. value)

Bold negative figures in the each right half of a field mean interference!

Reduction of Radial Clearance due to Interference Fits

Using the values listed in the tolerance tables the reduction of clearance that must be considered is calculated as follows:

$$\Delta C = \Delta C_L + \Delta C_E \qquad \text{(Eq. 8.1)}$$

where:

ΔC = total clearance loss by interference fits

ΔC_L = expansion of inner ring
as estimation ΔC_L is assumed to be approximately 80% of the probable interference of the shaft fit

ΔC_E = contraction of outer ring
as estimation ΔC_E is assumed to be approximately 75% of the probable interference of the housing fit

Smoothing of Matching Surfaces

Bearing seats usually have ground or fine turned matching surfaces.

During each bearing mounting or dismounting procedure a certain smoothing of the surface roughness of the bearing seats of shaft or housing occur (fig. 8.2).

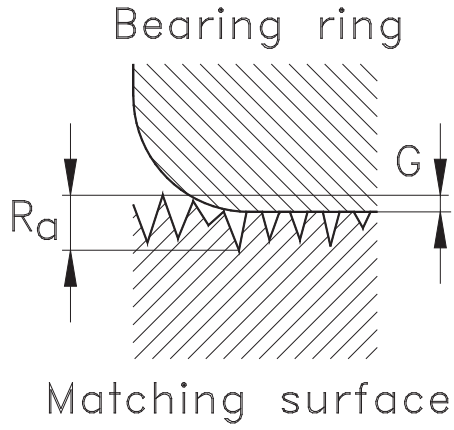

Fig. 8.2

where:

- R_a = surface roughness before mounting
- **G** = smoothing of roughness peaks during mounting procedure

The smoothing of surface roughness equates to approximately 40% of the initial Ra-values of the respective surface.

In cases of extremely rough surfaces this may even cause a lot of interference.

Additionally bearing fits with high surface roughness are more sensitive to damage by fretting corrosion.

The surface smoothing of the hardened and fine ground bearing surfaces, however, is negligible.

Detailed recommendations for the surface quality of bearing seats is stated in the chapter **“Design of bearing location”, page 303**.

Reduction of Clearance due to Temperature Differences

Additional to the reduction of the initial clearance due to the interference fits, the clearance also reduces due to temperature differences, which occur between inner shafts to outer housing seats.

Usually the operating temperature difference of inner to outer rings is approximately 5 to 10°C (40 to 50°F). This difference is caused mainly by the fact that the heat dissipation on the bearing outer ring is usually more effective due to the larger housing surface compared to the shaft, (fig. 8.3.).

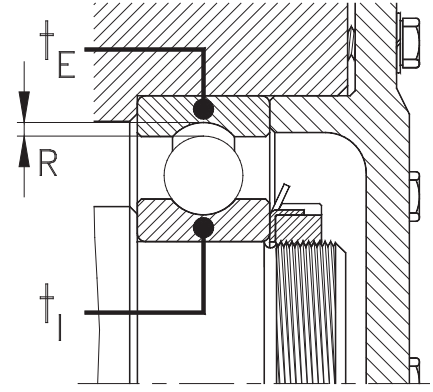

Fig. 8.3

where:

- t_E = operating temperature of outer ring
- **R** = operational clearance
- t_I = operating temperature of inner ring

When using steel shafts, in conjunction with either steel or cast iron housings which feature similar coefficients of thermal expansion and the temperature difference is less than 10°C (50°F), the effect of temperature on clearance reduction is negligible.

When housings are produced from steel cast steel or cast iron and higher temperature differences occur the effect on clearance reduction may be estimated using the following formula.

$$\Delta C_t = 1000 * \alpha * \frac{d + D}{2} * \Delta t \qquad \text{(Eq. 8.2)}$$

where:

ΔC_t = reduction of radial clearance due to the temperature difference [µm]

α = coefficient for thermal expansion, in the case of steel **α** 12 * 10-6 K^{-1})

d = bearing bore diameter [mm]

D = bearing outer diameter [mm]

Δt = difference between operating temperatures of inner and outer ring [°C]

In the case of housings made from **light metal alloys**, however, a special care must be taken due to the different thermal expansion properties of light metals when compared to steel.

For such housings, every temperature change will affect the bearing fit even without large temperature differences between bearing shaft and housing seats.

Material	Coefficient of thermal expansion α [10^{-6} K^{-1}]
steel	**12**
light metal	**22**

Table 8.2

For every deviation in the real operating temperature, from the reference temperature (**20°C**), the diameter of housing seat will change greater than that of the steel bearing outer ring.

In the event of low temperatures the diameter of the housing seat will shrink more than the bearing outer ring. This generates a stronger interference causing the ring to contract. For the same reason the housing seat will become loose at higher temperature which eventually results in the loss of interference and, respective, increases the bearing clearance.

This may be estimated using the following formula:

$$\Delta C_t = 1000 * \Delta\alpha * D * \Delta t \qquad \text{(Eq. 8.3)}$$

where:

ΔC_t = reduction of radial clearance due to the temperature difference [µm]

Δα = 10 * 10-6 K^{-1}
difference of thermal expansion coefficients.
For steel **α** =12 * 10^{-6} K^{-1} and
For light metal **α** = 22 * 10^{-6} K^{-1}

D = outer diameter of bearings [mm]

Δt = deviation of operating temperature from the reference temperature (**20°C/68°F**) [°C]

In general, for operating temperatures of **more than 20°C (68°F)** the housing seat will become loose, the bearing clearance will increase, i.e. **Δt** is **positive (+)**.

For operating temperatures **below** 20°C (68°F), however, the housing seat will become tighter, the bearing clearance will reduce, i.e. **Δt** becomes **negative** (-).

This effect may increase by the additional supply, or dissipation of heat, as in the case of cooled housings or additional heat supplied via the shaft.

Additional heat from the shaft will cause an expansion of inner ring raceway and thus a further reduction of the remaining bearing clearance.

Clearance of Bearings with Tapered Bore

Several bearing types are produced with tapered bores as a standard feature. This applies mainly to bearing types such as self aligning ball bearings, spherical roller bearings, including some high precision cylindrical roller bearing types used in spindles of machine tools.

In the majority of applications the mounting of tapered bore bearings is by using either adapter or withdrawal sleeves.

In a few cases, such as the double row cylindrical roller bearings for machine tool spindles (**series NN 30**), the bearings are mounted directly onto tapered journals.

For such high precision spindle bearings the tapered bore is also used to adjust precisely a certain clearance (fig. 8.4).

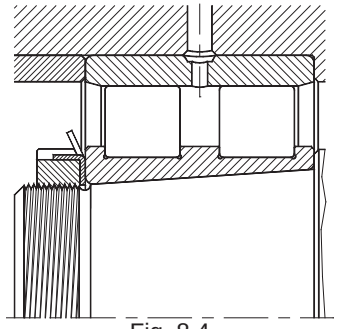

Fig. 8.4

The amount of initial clearance for tapered bore bearings is larger than that of the identical bearing with a cylindrical bore, even when belonging to the same clearance group.

This is due to the fact that during mounting the rings onto tapered journals an expansion occurs due to the axial displacement of the ring along the taper.

This results in a greater reduction of the initial clearance. In extreme cases these additional pressures can result in the premature failure of the bearing.

The amount of inner ring expansion depends upon the bearing size, the axial displacement during mounting and the taper angle itself.

This angle usually has a ratio of **1:12** (standard tapered), that means the inclination is 1 mm in a measured length of 12 mm. These tapers are designated by the suffix **K**.

Some bearing series with less section have a more flat taper, 1:30. These tapers are identified by the suffix **K30**.

To avoid any unintentional applied preload on the bearing, special attention must be taken ensuring a certain minimum clearance $\mathbf{R_2}$ (fig. 8.5) remains after mounting the bearing on the shaft.

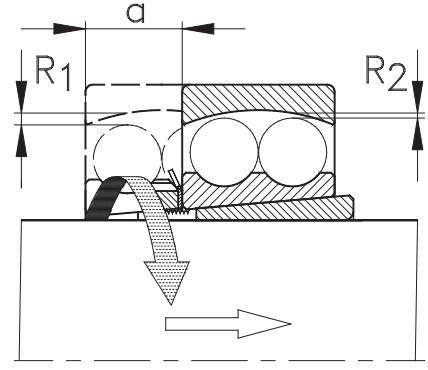

Fig. 8.5

where:

$\mathbf{R_1}$= radial clearance before mounting

$\mathbf{R_2}$= residual radial clearance after mounting

a = axial displacement

There is a simple linear ratio between taper arc, axial displacement and clearance reduction. These values are listed in Table **8.3**. (see next page).

In each case the bearing mounted onto the shaft must rotate and swivel easily.

Connection between Axial and Radial Clearance

Different bearing types have a certain relationship between their radial and axial clearance.

For example, in the case of single row deep groove ball bearings, the axial clearance a may amount to a multiple of the value of radial clearance, depending on their internal design, angle of contact and the amount of radial clearance (fig. 8.6) .

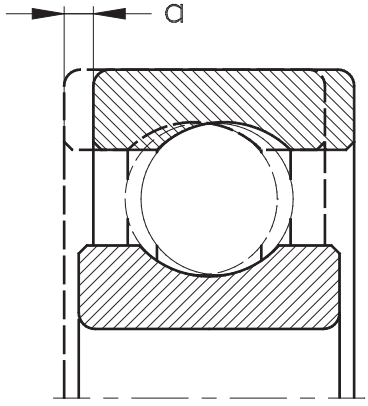

Fig. 8.6

In the vast majority of applications the axial clearance of radial bearings is usually of minor or no functional significance.

In certain cases, however, even for radial bearings certain accuracy of axial shaft guidance or for running noise levels is necessary.

This can be achieved by the selection of suitable bearing types, such as angular contact ball bearings, using adjustable bearing arrangements or by means of preloading the bearing arrangements.

For small and medium sized electric motors and generators that are frequently fitted with deep groove ball bearings, the bearings are often axially preloaded using cup springs to eliminate any axial clearance.

Table 8.3 contains approximate values to estimate the connection between radial and axial clearance of radial bearings:

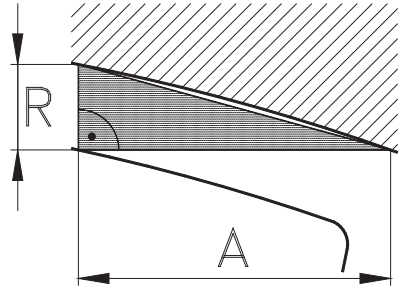

Fig. 8.7

Bearing Type	ratio A / R
Deep groove ball bearings *)	
standard clearance	**≈ 9 ÷ 15**
clearance group C3	**≈ 7 ÷ 10**
clearance group C4	**≈ 6 ÷ 9**
Single row angular contact ball bearing mounted in pairs, contact angle 40° (70B, 72B, 73B)	**1,2**
Angular contact ball bearings, double row **)	
32, 33 (contact angle 35°)	**1,4**
32B, 33B (contact angle 25°)	**2**
Four point contact ball bearings contact angle 35°	**1,4**
Self aligning ball bearings	**2,3 * Y_0**
Spherical roller bearings	**2,3 * Y_0**
Tapered roller bearings	
single row	**4,6 * Y_0**
mounted in pairs	**2,3 * Y_0**

Table 8.3

Remarks:

*) Depending on the individual bearing type and design, therefore, only a rough estimation possible.

) For double row angular contact ball bearings the **axial clearance only is stated.

Y_0 Static axial factor from product tables

Preloading of Bearings

In the majority of all applications rolling bearings are selected and mounted in such a way that they feature some clearance under operating conditions.

Other applications not requiring an operational clearance, such as machine tool spindles or truck wheel set bearings are produced and mounted with a negative operating clearance (i.e. preload). The bearing types that are most frequently used under preload, are angular contact ball bearings and tapered roller bearings. But some other bearing types like deep groove ball bearings and cylindrical roller bearings may also be used in a preloaded condition.

Depending on its type a rolling bearing may be preloaded either axially or radially.

Preloading influences the following bearing characteristics:

- **increasing the stiffness and rigidity of a bearing arrangement**
- **improved guiding accuracy**
- **reduction of running noise**
- **reduction of vibrations under service operation**
- **optimal use of bearings load rating**
- **compensation of thermal expansion**
- **avoiding sliding friction in the bearing**
- **ensuring minimum loading**

Increasing of Stiffness

Like other machine components, rolling bearings are flexible under load. In the case of rolling bearings the term **stiffness** defines the relationship between a load applied to a bearing and the resulting elastic deformation caused by this load. Depending on their internal design each bearing type features a different stiffness.

The stiffness is indicated by the force required to generate a certain deformation **[N / µm]**.

As the course of bearing stiffness is not linear, bearings in a preloaded condition have less deflection under equal load than unloaded bearings.

Due to the applied preload this effect has been anticipated.

Obviously the machine arrangement enclosing the bearing and adjacent parts must be designed to ensure a optimum applied preload to the bearings or the actual bearing assembled and adjusted to a specific preload.

Enhancement of Guiding Accuracy

Due to the elimination of the bearing clearance in both radial and axial direction and the resulting higher stiffness of the bearing assembly, the shaft guidance accuracy will be improved.

This applies especially to applications like machine tools spindles, gearbox shafts and wheel bearing assemblies of vehicles.

Running Noise and Vibration Characteristics

Another feature of the preloaded bearings is less running noise, because of the clearance.

Furthermore, as the shaft guidance is more accurate the vibration characteristics of a whole spindle arrangement may be reduced and in some application totally removed by using preloaded bearings.

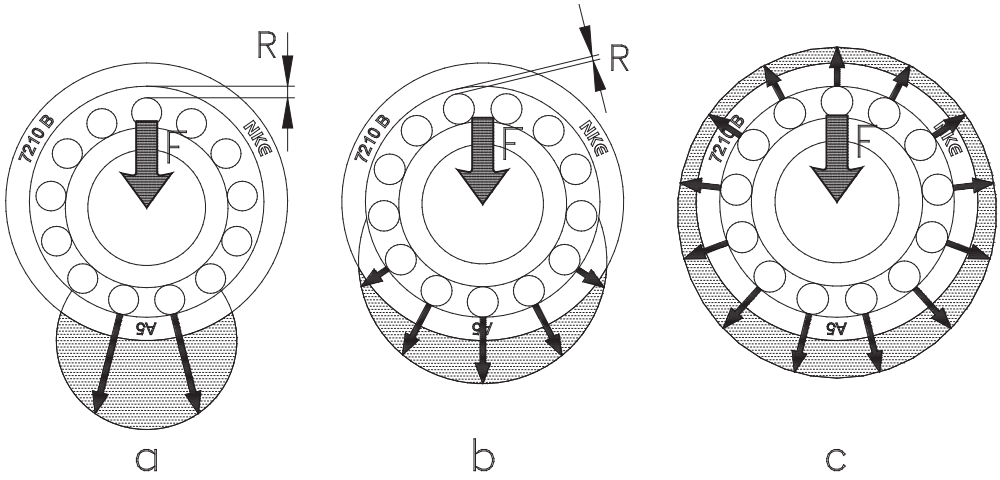

Fig. 8.8

Optimum Use of the Potential Load Rating of Rolling Bearings

The transmission of loads within a rolling bearing occurs from one bearing ring through the rolling elements to the other bearing ring.

The more rolling elements supporting in the transmission of forces, the less the specific pressure is in the small contact zone between the rolling element and raceway.

Because of this both the static load rating and the dynamic bearing life depends on the specific pressure applied to the bearing material.

There is a direct relationship between the load that the bearing is exposed to and the number of rolling elements supporting the load transmission.

Fig. 8.8 shows a schematic diagram of the affect of preloading the bearings under the influence of a constant load “F”.

Fig. 8.8a:

The bearing shown in **Fig. 8.8a** has a large clearance “**R**” with few rolling elements supporting the load transmission.

Avoidance of Slip and Sliding Friction

Thus, the loaded zone (shaded area) is relatively small, and the specific pressures become relatively high.

Fig. 8.8b:

This bearing shows **no** or **very small** operational clearance.

Under pure radial load, the loaded zone (shaded area) surrounds approximately half the circumference, thus roughly half the number of rolling elements are supporting the load transmission. Therefore, if the load applied has the same magnitude as in Fig. 8.8a, the specific pressure is less.

Fig. 8.8c:

This bearing shows a **negative clearance (preloading)**. Due to the preloading all rolling elements are involved in the transmission of forces. Thus the specific load per rolling element is less than in either of the other cases.

Rolling bearings require a certain minimum load to be applied for an effective function. Such a minimum load forces the rolling elements to roll over the bearing raceways.

If such a minimum load is not guaranteed, high sliding friction will occur. If this reaches excessive amounts, the smooth bearing surfaces may be damaged.

Some bearing types, particularly, thrust ball and roller bearings are very sensitive to sliding friction. That is why these bearing types need a special care to ensure their minimum loading.

Also for operating conditions such as shock loads or vibrations this may cause increased amounts of sliding friction in the bearing.

In most applications the minimum loading of the bearings is already achieved by the weight of shaft and the rotating machine components, in other cases by the applied external load.

In cases where this is not possible a minimum load may be achieved by **preloading** the bearing assembly.

Such a preload may be applied by means of springs, such as recoil springs or cup spring pads.

Applied Amount of Preloading

The amount of preload applied to a bearing arrangement should be determined very carefully.
Various different influences must be taken into account, such as the required stiffness of bearing assembly, bearing life, characteristic features of each bearing type and all relevant operational parameters.

Also external influences like magnitude and type of load, possible shock loads and operating temperature must be considered. Thus in such cases no general valid guidelines may be applied. Practical experiences with the same or similar applications should also be considered.

Because of the many influences accurate calculations sometimes is not possible. Therefore, in such cases it may be necessary to initiate practical run-testing of new machine design arrangement under operating conditions. In this way precise values can be determined.

Reduction of Running Noise by Preloading

The armature of small and medium sized electric motors or generators are frequently fitted with deep groove ball bearings.

As a preventive measure to avoid possible bearing failures caused by false brinelling, these bearing arrangements are often mounted with zero clearance or light preload. This is achieved by mounting a cup spring or spring pad acting against the stationary bearing ring, thereby, eliminating any axial play and assists in the reduction of running noise (fig. 8.9)

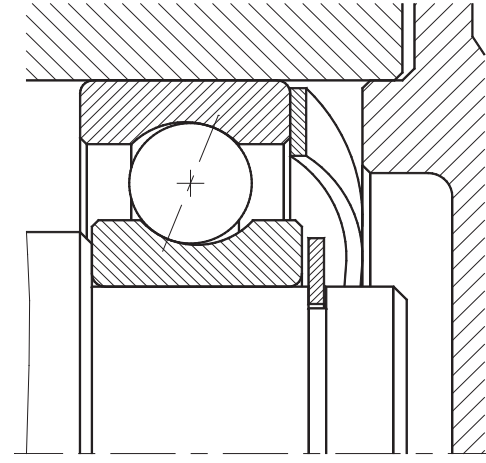

Fig. 8.9

This is also commonly applied in bearing assemblies of high speed grinding spindles to provide a quiet and smooth running.

The amount of applied preloading force depends on the bearing size and the reason for preloading:

As a rule of thumb, the following recommendations should be considered:

- to eliminate any **residual clearance**:
  F [N] ≈ 5 * d [mm]

- to reduce the **running noise**:
  F [N] ≈ 5 to 10* d [mm]

- to prevent bearing damage due to **false brinelling**:
  F [N] ≈ 15 to 20* d [mm]

where:

F = spring force **[N]**

d = bearing bore diameter **[mm]**

To ensure a certain **minimum load**:

The spring force has to be adjusted according to each bearing type for recommendations (see the specific product information sheet).

Determination of Preload Force

In the case of preloaded or adjusted bearing arrangements, as shown in fig. 8.10, the load distribution is a central acting, pure radial acting load to both bearings. For bearings having contact angles ≈ 0°, such as angular contact ball bearings and tapered roller bearings, each applied external radial load generates an internal thrust force.

When additional external thrust forces (**F_a**) occur, as in the case of wheel bearings of motor vehicles driving around corners, this will cause, providing the external forces are larger than the internal thrust forces, the unloading of outer bearing (**B**).

The opposite bearing, located at inner position (**A**), however, has to accommodate the additional force.

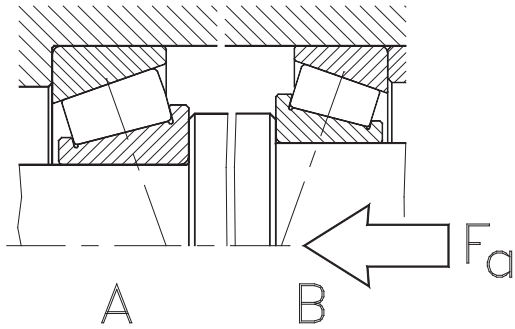

Fig. 8.10

In extreme cases this may lead to the total unloading of the bearing (**B**), whilst the opposite bearing (**A**) even may become overloaded.

In these cases the amount of preload to be applied must be defined in such a way, that the permanent unloading of one of the two bearings will be avoided, on the other hand the preload must not cause any overloading of the bearing assembly.

Preloading can also be used to increase the stiffness of a bearing arrangement. In this case the magnitude of the applied preload force must not exceed half of the external thrust loads.

A higher value of preload is no longer necessary, because excessive preloading would shorten the bearing life not increase it.

General

One of the most important elements required for the effective function of bearing arrangements is correct lubrication.

The **lubricant** separates the metallic bearing surfaces and thereby reduces friction, preserves the steel parts and acts as an additional barrier against the entry of contaminations or impurities into the bearings.

For each of these reasons the lubrication fulfils a key function in each bearing application. A malfunction of the lubrication usually causes an immediate bearing failure.

Methods of Lubrication

Normally three different lubrication methods are used:

Grease Lubrication

The vast majority of all rolling bearings, some 90%, are grease lubricated.

The main advantages of grease lubricating are:

- very simple application
- less maintenance required
- additional sealing effect
- pregreased sealed or shielded bearing
- simple sealing of bearing positions
- large number of different lubricants available
- greased “for-life” bearing arrangements possible

Oil Lubrication

Oil lubrication is generally used when oil is available normally within the respective machine, or where special operating conditions apply (e.g. high speeds and/or loads) that require effective heat dissipation at specific positions or areas.

In some high speed applications accurate applied lubrication to specific areas (e.g. guiding surfaces of cages) may be necessary. The disadvantage of oil lubrication is the relatively high effort required to provide an effective and efficient seal at each bearing position.

Solid and Dry Lubrication

Where applications do not allow the use of oil or grease lubrication for various reasons, other materials, including some metals that are suitable in separating the bearing surfaces.

Some examples are:

Graphite

- used as a powder or press formed as a cage.

Molybdenum disulphide (MoS2)

- in the form of powders, with additives.

Polytetraflourethylene (PTFE)

- in the form of powders, with additives.

Metallic coatings

These are usually very thin coatings applied by a galvanising process (e.g. extremely thin layers of gold or silver).

Such metallic coatings are used for example where bearings run under vacuum, i.e. X-ray equipment or other special applications.

Sliding varnish

A solid lubricant in the form of fine powder is dissolved in a suitable solvent or other medium. After applying the mixture, the solvent will vaporise leaving the solid lubricant as a fine film on the surfaces.

Surface treatments

Such surface treatments are usually applied as a protective measure against corrosion, in addition to the normal lubrication, where bearings are exposed to extreme conditions.

The most commonly used surface treatment for rolling bearings is bonderizing.

Selection of Lubricating Method

The decision to select the most suitable lubricating method to be used for any application should be made at the early stage of design as this has an influence or the design of adjacent parts.

The lubricating method to be used for a particular application is always dependant on individual operating conditions, including the anticipated operating speeds, temperature range and environment.

The product tables list recommendations for speed ratings of each individual bearing under grease or oil lubrication.

Speed Ability of Lubricants

The speed capability of a bearing and the ability of the lubrication used to attain these specific speeds are equally important.

A significant equation to evaluate the ability of a lubricant or a certain lubricating method is provided by the so called **speed characteristics, ($n * d_m$)**.

$$n * d_m \left[\frac{mm}{min}\right] \qquad \text{(Eq. 9.1)}$$

where:

n	bearing operating speed	[min^{-1}]
d_m	bearing pitch diameter	[mm]

Note: this may be estimated as follows:

$$d_m = \frac{d + D}{2} \left[mm\right] \qquad \text{(Eq. 9.2)}$$

where:

d	bearing bore diameter [mm]
D	bearing outer diameter [mm]

Examples for Typical $n * d_m$-Values:

Lubricating method	$n * d_m$
Grease lubrication	
standard - bearing greases	≤ 500.000
special greases	≤ 1.000.000
Oil lubrication	
oil bath lubrication	≤ 500.000
circulating oil lubrication	≤ 750.000
splash oil lubrication	≤ 800.000
oil mist lubrication *)	≤ 1.500.000
minimum quantity lubrication *)	≤ 3.000.000

Table 9.1

*) For characteristics of > 1.000.000 practical experience is also of major importance. Special appliances such as oil intercoolers, additional pumps or a separate compressed air system for oil and air lubrication may become necessary.

The values listed in table 9.1 are for as guidance only.

To obtain detailed and accurate values for a specific lubricant please contact your lubricant supplier.

Tasks of Lubricants

All lubricants used in rolling bearings have to fulfil the following main tasks:

- **separation of metallic surfaces**
- **reduction of friction in the loaded zones (i.e. both the rolling contact and in the areas having sliding friction)**

- **reduction of wear**
- **preservation of bearings parts**
- **avoid the entry of pollution into the lubricating gap**
- **heat dissipation with oil lubrication**

Significant Values of Lubricants

Viscosity

Viscosity indicates the individual layers flowing characteristics of a liquid when in motion.

It is one of the most important features when selecting oils. In the case of lubricating **greases** the viscosity of each **base oil** is indicated.

In principle, distinction is made between the **nominal viscosity** of a lubricant which is a specific reference value and the **operating viscosity** that results under given operating conditions at the bearings operating temperature.

Because the viscosity of a lubricant is highly dependant on its actual temperature, the **nominal viscosity** is always indicated together with a defined reference temperature. Usually the indicated **nominal viscosity** refers to **40°C** (ν_{40}), sometimes other reference temperatures are also stated, such as (ν_{50}) or (ν_{100}).

Consistency

The **grade of consistency** indicates the "**stiffness**" of grease to defined **NLGI-scales** according to DIN 51818.

Very soft greases, used for high speeds, have low NLGI-grades; stiffer greases have higher NLGI-grades.

For lubricating rolling bearings a grease lubrication to NGLI scales 2 and 3 is normal, occasionally, grease to scales 0 and 1 are also used.

Separation of Metallic Bearing Surfaces

The most significant feature of any lubricant is to achieve a complete separation of the bearing metallic surfaces in the "loaded zone".

Also, the standardised calculation of nominal bearing life (L10) according to **DIN ISO 281** assumes a **sufficient separation** of the metallic bearing surfaces, (fig. 9.1).

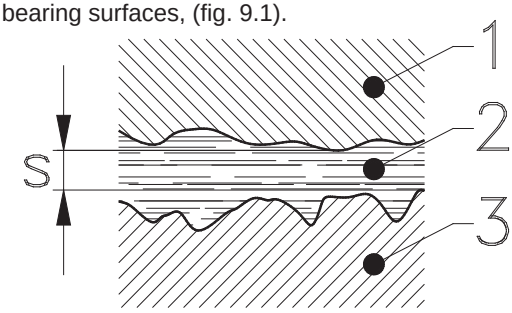

Fig. 9.1

Effective separation of the metallic bearing surfaces is reached when the thickness (**s**) of the **lubricating film** (**2**), which builds up in the contact area between the rolling element surfaces (**1**) and the bearing rings (**3**), is large enough to separate them completely.

Therefore the film thickness (**s**) must be larger then the total amount of surface roughness deviations of the contacting parts.

The film thickness (**s**) depends on the **operating viscosity** of the base oil and the operational speed.

Furthermore no solid pollution or foreign particles with grain sizes of more than the thickness of **lubricating film** (**s**) may be present in the lubricant.

When these pre-requisite conditions are fulfilled the so-called "**hydrodynamic**" lubrication is attained.

In practice, however, the conditions of such a hydrodynamic lubrication will not be attained on all occasions.

In many applications the so called "**limited lubrication**" occurs, where a complete separation of the metallic bearing surfaces is not always guaranteed, (see fig. 9.2).

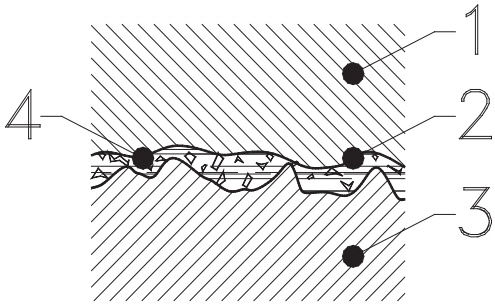

Fig. 9.2

In practice slow speeds, high temperatures, the use of lubricants with low operating viscosity, pollution in the lubricating gap or old lubricants may lead to a to lower thickness of lubricating film allowing the metallic bearing surfaces to contact each other, as shown in fig. 9.2.

Selection of Viscosity of Lubricant

The actual **operating viscosity** of a lubricant is determined by the following factors:

- **nominal viscosity of lubricant**
- **bearing size**
- **operating temperature**
- **speed**

A simple and for the majority of applications accurate estimation of the operating viscosity of a lubricant under operational conditions is provided in the procedure as described in the chapter "**Selection of Bearing Type and Size**" (see page 255).

The following steps are required;

1) **calculation of bearing, pitch diameter, d_m**
2) **estimation of required operating viscosity ν_1**
3) **determination of actual operating viscosity ν**
4) **build the ratio of required to actual operating viscosity κ**

There is a close relationship between the existing lubrication situation in a bearing application and the service life that may be forecast.

This relationship is considered in the modified method of rating life of a rolling bearing by the use of several calculation factors.

See the chapter "**Selection of Bearing Type and Size**" page 267.

Additives in Lubricants

To obtain specific characteristics in lubricants one or more agents may be used, the so called "**additives**".

The more important additives are **anti-oxidants** that lengthen the ageing behaviour of a lubricant, **EP-additives** provide better load carrying performance (**EP** = **E**xtreme **P**ressure), and various other compounds and components.

These agents undergo a chemical reaction, in the case of EP-additives with the bearing steel.

Especially for applications with limited lubrication, where the lubricating film will not be of sufficient thickness under all operating conditions, a suitable lubricant additive becomes of particular importance.

In the case of lubricants having many additives the compatibility of the lubricant with materials of seals however must be clarified.

Lubricating Greases

Lubricating greases principally comprise of a base oil and thickener and activating agents, called additives.

Base oil

The base oil determines substantially the lubricating behaviours of lubricating grease. The most common base oils are mineral oils, and for special applications synthetic oils.

When determining the required operating viscosity of lubricating greases the **viscosity of the base oil** must be considered.

Thickener

The **activating agent** or **thickener** in grease holds the base oil. The thickeners are generally metallic soaps (e.g. lithium, calcium or sodium soaps), although bentonite, polyurea and some other components (i.e. PTFE) are used.

There are also **lubricating greases with mixed soaps** that have thickeners consisting of two different soaps. Commonly used are mixtures of sodium / calcium, or lithium / calcium, etc.

Another grease type is represented by the so called "**complex soap**" grease, featuring a thickening agent consisting of a metallic soap and a metal salt.

Based on which thickeners are used the grease types are commonly classified as **lithium soap, mixed soap** and **complex soap**.

The **thickener also** substantially determines the consistency (stiffness) of grease, its mechanical and chemical resistance, the temperature range possible and the resistance of the lubricating grease to repel moisture.

Consistency grades

The consistency of lubricating greases is determined by measuring the penetration depth of a standardised "test" cone into the grease at a temperature of 25°C (77°F) for a period of 5 seconds.

Before the penetration test begins, the grease sample is prepared to a defined procedure.

Depending on the stiffness of the grease the deeper the test cone penetration the softer the grease is, also the NLGI classification is lower.

The values obtained using these methods are called "**worked penetration**". The classification of grease values for worked penetration is defined as consistency grades: (table 9.2).

NLGI-classes consistence grade (DIN 51818)	worked penetration [0.1 mm]
000	445 to 475
00	400 to 430
0	355 to 385
1	310 to 340
2	265 to 295
3	220 to 250
4	175 to 205
5	130 to 160
6	85 to 115

Table 9.2

Depending on the bearing type, size and known individual operating conditions greases of different consistency grades may be used.

Soft greases are optimum for use in small and miniature bearings, at low temperatures or high speeds, when a central lubrication system is used.

Stiffer greases are suitable for large bearings running at low speeds or high temperature application.

Additionally, stiffer bearing grease also has a better sealing effect.

Some significant values for the more common bearing greases are listed in the table 9.3:

Thickening agent soap base	Base oil	Temperature range >	Temperature range ≤	Remarks
Lithium	mineral oil	**-30°C** (-22°F)	**+120°C** (+122°F)	normal rolling bearing grease
	ester oil	**-60°C** (-76°F)	**+130°C** (+266°F)	low temperatures / high speed grease
	silicon oil	**-40°C** (-40°F)	**+170°C** (+338°F)	high and low temperature grease
Sodium	mineral oil	**-30°C** (-22°F)	**+100°C** (+122°F)	poor water resistance
Bentonite	mineral oil	**-20°C** (-4°F)	**+150°C** (+302°F)	high temperature grease for low speeds
Polyurea	mineral oil	**-20°C** (-4°F)	**+150°C** (+302°F)	high temperature grease for high speeds
Calcium	mineral oil	**-20°C** (-4°F)	**+60°C** (+140°F)	superior water resistance (i.e. sealing grease)
Calcium complex	mineral oil	**-30°C** (-22°F)	**+150°C** (+302°F)	high temperature grease, also for higher loads
Sodium complex	mineral oil	**-20°C** (-4°F)	**+130°C** (+266°F)	also for higher loads
Aluminium	mineral oil	**-20°C** (-4°F)	**+70°C** (+158°F)	good water resistance
Aluminium complex	mineral oil	**-40°C** (-40°F)	**+150°C** (+302°F)	high temperature grease for high speeds, also for higher loads
Barium complex	mineral oil	**-20°C** (-4°F)	**+150°C** (+302°F)	high temperature grease for high speeds, also for higher loads
	ester oil	**-60°C** (-76°F)	**+130°C** (+266°F)	low temperature grease for high speeds; good resistance against vapour

Table 9.3

Lithium soap greases

are the most common standard bearing greases. Lithium based greases are normally the standard grease in sealed or shielded bearings.

Calcium base greases

have a very good water resistance, but have limited and low temperature range.

Calcium complex greases

also have good water resistance, with higher temperatures and range.

Calcium complex greases have a tendency to harden when cooled rapidly.

Sodium base greases

enable good protection against corrosion because of their ability to emulsify with a limited amount of water. The consistency of the grease, however, becomes more liquid(i.e. thinner or flowing).

Polyurea greases

outstanding temperature resistance, suitable for low or medium loads.

PTFE-greases

special lubricant for extreme operating temperatures, very good resistance against chemical influences.

Miscibility of Greases

In general, the mixing of **different** lubricating greases should be avoided where ever possible.

Even when blending greases that have theoretically the same or similar characteristics unforeseen effects may occur caused by chemical reactions between certain components of the lubricants or their additives.

Only lubricating greases that have the same thickener and identical or similar base oils may be blended (e.g. lithium and calcium soaped greases).

In cases where change of the grease used becomes necessary, all remaining old grease must be removed. Also the remaining lubricant in housing cavities, lubrication pipes or grooves must be carefully removed.

Especially in the changer over period, special attention should be paid to the lubrication situation in the bearing arrangement.

If required, the defined relubrication intervals should be shortened during such a conversion period.

Grease Quantity

The amount of grease required for lubricating a bearing is only very small.

Following the initial grease fill and the start up period some volume of grease is expelled from the bearing by the rotating elements. This grease volume creates a reserve supply for the bearing. In this way the bearing, impart, automatically controls the correct volume of grease into the bearing.

The grease displacement during the running-in of a bearing arrangement can generate additional friction that leads to higher operating temperatures during this period; this is normal.

In extreme cases where grease displacement from the bearing is not possible, the heat generated can cause a hot-run of the bearing.

The lubricating grease fill volume is determined mainly by the bearing design and its operating speed.

The free space within the bearing itself has to be fully filled with lubricating grease in all cases.

The grease fill volume applied to the housing cavities should be determined following the recommendations given in table 9.4:

Speed ratio *)		Grease filling **)
>	≤	[%]
-	20	**80** to **90**
20	75	**30** to **50**
75		**25**

Table 9.4

*) in % of the speed ratings with grease lubrication

**) in % of bearing housing cavities

Under very special operating conditions, such as pulley bearings running at very low speeds, the housing cavities may be fully packed with grease to avoid any formation of condensing water (i.e. creating a seal).

Grease Service Life and Relubrication Intervals

Bearing lubricants undergo permanent mechanical stressing caused by the over rolling of the rolling elements. Additionally, lubricants change their characteristics, particularly when operating at high temperatures which generate some oxidation, the presence of humidity, pollution and other elements also bring about certain chemical reactions.

For these reasons the service life of lubricants is limited.

In the case of greased "**for-life**" rolling bearings, mainly bearings that have shields or seals on both sides, the service life of the lubricating grease inside the bearing is expected to be longer than the probable bearing life rating.

When maintaining bearing applications it is essential to be able to estimate the **service life** of a lubricant realistically.

This becomes evident where regular relubrication is necessary.

The duration of the grease service life depends on the individual operating conditions, particularly on the operating temperature and bearing speeds

A realistic evaluation of the **service life of lubricating grease** is possible according to the following equation:

$$t_n = \frac{a * 10^6}{n * \sqrt{d}} - b * d \quad [h]$$

(Eq. 9.3)

where:

a and b	bearing type and series coefficients (Table 9.5)	
n	bearing operating speed	[min^{-1}]
d	bearing bore diameter	[mm]
t_n	service time	(operating hours)

For safety reasons the **relubrication intervals** of new machines or plants, where no practical experience yet exists should not exceed approximately 50 to 60% of the initial calculated **service life** of lubricant.

The duration of relubrication intervals may be adjusted to suit the criteria.

Although in the first instance very careful observation of the lubrication condition and effective monitoring of the bearing positions is recommended.

Bearing types and series	Coefficients a	b
Deep groove ball bearings		
160, 60, 62	75	18
63	65	18
64	55	18
Angular contact ball bearing		
72 B	65	18
73 B	55	18
32	55	18
33	55	18
Four-point contact ball bearings		
QJ 2	65	18
QJ 3	55	18
Self aligning ball bearings		
12, 22	75	18
13, 23	65	18
Cylindrical roller bearings		
N.10, N.2, N.2.. E	75	18
N. 3, N. 3 . . E	65	18
N. 4	55	18
Taper roller bearings		
302.., 320 .., 322..,	20	7
303.., 313	18	7
323..,	15	7
Spherical roller bearings		
222..	20	7
223..	15	7

Table 9.5

Influences to the Duration of Relubrication Intervals

The relubrication intervals that are calculated according to formula eq. 9.3 may be adjusted under certain circumstances.

The values obtained are only valid for constant operating temperatures not exceeding 70°C (158°F). Above 70°C (158°F) the mineral oil based lubricants undergo extremely accelerated ageing.

When the lubricant is exposed to constant operating temperatures above 70°C (158°F) the calculated value for **relubrication intervals**, using the equation eq. 9.3 must be halved for each 15°C (59°F) increase in operating temperature.

The course of this reduction is shown graphical in fig. 9.3:

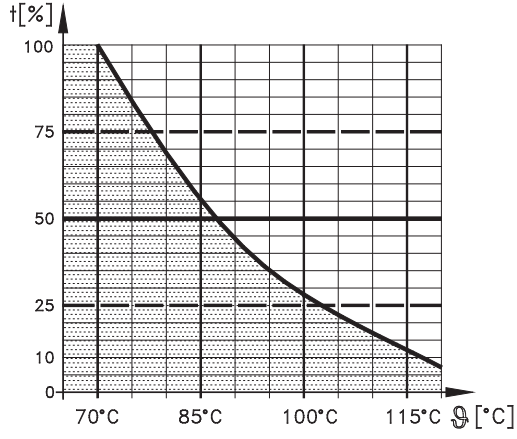

Fig. 9.3

where:

t	relubricating interval [%]
ϑ	constant operating temperature [°C]

If grease lubricating the bearing also acts as a seal against entry of pollution, or where the bearing outer ring rotates, the relubrication intervals must be further reduced. This also applies with the presence of moisture, dust, chemicals and vibrations etc.

Alternatively, where bearings run at low speeds and moderate operating temperatures the relubricating intervals may be extended.

In every case practical experience of relubricating intervals under known operating conditions for the same or similar machines and plant, must be considered.

Additional information on specific characteristics of lubricants, their chemical reactions with some elements and the anticipated service life of lubricant under certain operating conditions are available from the lubrication manufacturer.

Relubricating Quantity

The applied volume of new grease must be charged in such a way that a complete replacement of the old, used grease is guaranteed.

The grease volume required for **relubrication purposes** may be calculated using the following equation:

$$m = \frac{D * B}{1000} * i \qquad \text{(Eq. 9.4)}$$

where:

m	grease volume	[g]
D	bearing outer diameter	[mm]
B	bearing width	[mm]
i	factor for relubricating frequency according to table 9.6	

Relubricating frequency	i
weekly	**2**
monthly	**3**
yearly	**4**

Table 9.6

Grease Circulation

At the initial design stage the discharge of old used lubricant from the bearing position must always be considered, such as escape holes and ducts, or cavities in the underside of the housing or castings to accept and eject the old used lubricant, including the discharge of any surplus due to excessive relubrication which must be avoided.

A simple and effective method to protect the bearing against excessive lubricating is to install grease valves, as shown in fig. 9.4.

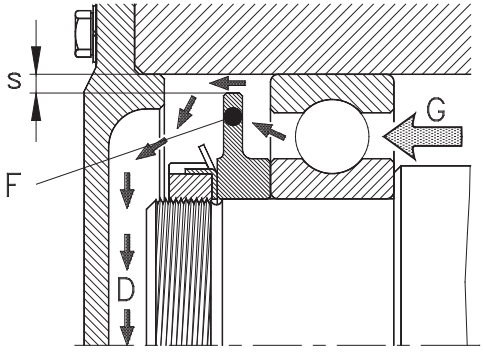

Fig. 9.4

s	gap between grease valve outer diameter and housing bore
F	grease valve
G	fresh grease supply
D	discharge of used grease

Grease valves are discs (**F**) that fit alongside the rolling bearings. Their outer diameter is defined in such a way that a gap (**s**) of approximate 1 to 3 mm between the housing bore is provided. The supply of fresh grease (**G**) during relubrication must be injected from the opposite side to the grease valve.

Relubrication of the bearing creates high pressure in the housing when injecting fresh grease (**G**).

This pressure causes the old grease (**D**) to discharge from the bearing position providing the pressure is maintained.

To ease the supply of fresh grease, several bearing types have lubrication holes and grooves. Typical examples are, supporting rollers, truck runner bearings, double row taper roller bearing and most spherical roller bearing and types where lubrication holes and grooves in the outer ring are a standard feature. (fig. 9.5).

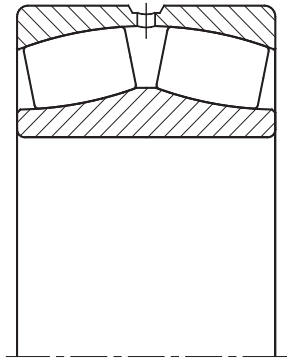

Fig. 9.5

Lubrication holes, grooves, grease valves and lubricating pipes etc. must be dimensioned in such a way that no extreme back pressure may build up during relubrication.

The supply of fresh grease should be actioned as close to the bearing as possible.

In the case of bearing housings having different or asymmetric voids the grease supply must always be in a direction from the smaller cavity towards the larger one.

Contamination of the grease channels due to dust, for example, may be avoid easily by fitting grease nipples.

Oil Lubrication

The design requirement for bearing arrangements with oil lubrication is considerably higher than for grease lubrication.

For the lubrication of rolling bearings mineral oils, with or without additives are generally used, synthetic oils are normally used for special applications.

The determination of the required oil viscosity for lubrication of a rolling bearing should be completed following the guidelines shown in chapter **"Selection of Bearing Type and Size", page 270**.

In practice the selection of oil viscosity is often determined by other influences such as in the case of rolling bearings used in gearboxes.

Lubricating Methods

Depending on the individual application requirements the following methods of oil lubrication may be used:

Oil Bath Lubrication

This is the simplest form of oil lubrication. This method is usually used where the oil is also used for lubricating other machine components. With oil bath lubrication no additional equipment such as pumps etc. are required.

Typical applications are gear boxes, where the oil is primarily used for the lubrication of gear wheels.

In the case of oil bath lubrication the bearing usually stands directly in the lubricating oil, (fig. 9.6).

When the bearing rotates, oil is carried by both the cage and the rolling elements and is distributed by centrifugal force to all areas of the bearing to be lubricated.

On the other hand the constant displacement of oil, by the bearing, causes additional friction and thus generates heat.

This is why the maximum oil level(s) should not, where the speed exceeds 40% of the listed speed rating for oil lubrication, be higher than approximately half the diameter of the lowest rolling element (see fig. 9.6).

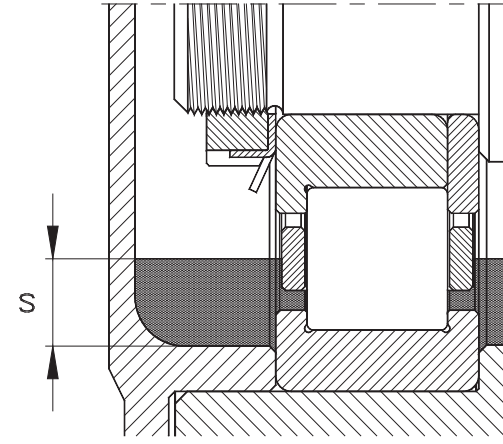

Fig. 9.6

Circulating Oil Lubrication

With this method the oil required for lubricating the bearings is collected in a sump. From this sump the oil is fed by pipes and pumps to the various bearing positions.

This method is very effective when heat dissipation is necessary. Both the oil and oil sump volumes must be adjusted to the requirements of heat dissipation

If necessary, additional oil coolers may be integrated in the oil circuit.

In every case the size of oil sump should be large enough to allow the wear particles in the lubricating oil to settle.

Before the oil recirculates in the lubrication system, it should be filtered to prevent the entry of any contaminations into the bearings.

Asymmetrical bearings, (i.e. angular contact ball bearings and taper roller bearings), generate a certain pumping action due to their internal design.

This effect may also be used to support the oil circulation in the lubricating system.

In the case of circulating oil lubrication the drain holes and the oil return pipes must be dimensioned to prevent the build-up of some back pressure.

Splash Oil Lubrication

With this method the oil splash or spray, from the rotating gear wheels immersed in the oil, is used for bearing lubrication.

Some simple gearbox applications use splash rings, which rotate loosely on the shaft, creating an oil distribution to the bearings within the gearbox casing. Where necessary, auxiliary features (i.e. oil grooves, ducts and voids) should be provided to ensure satisfactory oil volumes.

The effective lubrication of bearings must be guaranteed for all operating conditions.

Oil Injection Lubrication

This lubricating method is suitable for bearings running at high speeds, (e.g. spindle bearings).

The oil injection method provides an oil jet, via a nozzle, directly into the gaps between the outer, cage and inner ring shoulders.

The pressure of the oil jet, however, must be strong enough to penetrate the air turbulence caused by the fast rotating bearing.

This is achieved if the injection velocity is greater than 15 m/s. The nozzle bore diameter should be larger than 1 mm.

In the case of larger rolling bearings additional nozzles may be located around the bearing circumference.

Due to the relatively large oil volumes circulating all oil holes and feed pipes have to be sized correctly.

Due to the very precise lubrication system and large oil volumes circulating, this method normally attains excellent operating perform and outstanding temperature cooling and control.

Oil Mist Lubrication

This method is also suitable for bearings operating at high and very high speeds, but a compressed air system is required.

With oil mist lubrication the lubricating oil is vaporised into minute drops by an atomiser. Then the air-oil mixture is fed to the bearing position where a continuous flow lubricates and cools the bearing.

Oil Quantities, Oil Ageing

There are no valid rules or conclusive equations for the determination of the optimum oil volumes to be used in a specific application or machine.

This is due to variable influences of a number of different parameters. The optimum is only found through specific field tests and reliable practical experiences, particularly for totally new design projects where experience gained with other “similar” applications or machines etc., could be used as a base for test runs and field trials to determine optimum oil volumes.

Additionally, major changes or modifications, even small changes to the internal design may influence the oil flow and thus heat dissipation, required oil volumes, oil service life etc., it is advised practical test runs are completed.

General

NKE rolling bearings are high precision machine elements that are produced in modern plants using the latest high technology equipment, machining to close tolerances of some few microns (e.g. 1 micron = 1µm = 0.001 mm).

Extensive quality assurance procedures and systems throughout the whole manufacturing process combined with continuous inspection of product quality ensuring even the most exacting demands in operating reliability, running accuracy and bearing service life are met.

But, to guarantee the optimum function of a bearing arrangement, special care and attention must be given to simple basic rules concerning storage, handling and bearing mounting.

Bearing Storage

All NKE rolling bearings supplied are protected by a high quality preservation oil and are optimum packed either single boxed, bulk or cassette packed or to customer requirements.

The **anticorrosion agent** applied at the factory enables an effective function of the products even following long storage providing correct storage in their original undamaged packaging is maintained.

In principle bearings should always be stored in their **original packaging**. They should only be unpacked prior to their fitting.

The **storage** of bearings should be in a clean environment at normal room temperature, such temperatures being 15°C - 25°C (59°F - 77°F).

The relative air humidity must not exceed 60%. Under no circumstances should rolling bearings be stored in immediate proximity to water, humidity or any other aggressive chemical matters.

Also the storage of bearings or associated parts close to any metal removing or dust producing machines must be avoided.

Bearings also should not be exposed to any long lasting vibrations or shocks during handling or storage, because in this way the bearings may be mechanically damaged permanently.

Bearings in a packed condition must not be exposed to strong temperature variations or direct sun light because of the danger of water condensation (i.e. humidity) in the packaging.

In principle all bearings, most particularly the larger ones must be stored **flat** (i.e. axially).

This is necessary because the individual weight of the larger bearings may deform the bearing rings if they are stored vertically (i.e. radially) additionally, storage of bearings directly on the on the ground or a floor must also be avoided.

Gross mishandling must be avoided at all times, particularly, shocks caused by insecure stacking and carelessness during stock utilisation and rotation. If for any reason the original packaging is damaged the product inside must be closely examined for its condition.

Shelf Life

Some bearing types, especially those having shields or seals on both sides, which are supplied grease filled (suffixes **-2RS**, **-2RSR**, **-2Z**, **-2LFS**...) a change in grease consistence must be considered during a long-term storage.

Over long storage periods the grease becomes stiffer and some grease have a tendency to secret small amounts of their base oil. In this way the shelf life of such bearings is reduced. The duration of shelf life differs according to the grease used and the individual storage conditions.

In the case of stiffened grease a somewhat higher temperature and running noise is to be expected during the starting phase of the bearing.

Only careful consideration of all the relevant stated points is the bearing available for mounting in good condition on demand.

Presuppositions for Mounting

The correct mounting of a bearing is one of the most important basic requirements to ensure the bearing arrangement will work correctly.

Any bearing damage during mounting may have fatal consequences and cause accumulative losses. In such a case the value of the bearing is negligible when compared to the potential total consequential damage.

Cleanliness

When dealing with rolling bearings, maximum cleanliness is a paramount basic requirement.

The rolling bearing running surfaces of rings and rolling elements usually have a surface finish roughness of some tenths of microns (1/10 µm = 0,0001 mm). Such very smooth surfaces, however, are very sensitive to damage.

Rolling bearings are able to transmit large forces via very close contact areas (fig. 10.1). In between the rolling elements (1) and the rings (3) a lubricant film (2) builds up which separates the metallic bearing parts.

Due to the applied loads, extremely high lubricant pressure develops which causes some elastic deformation in the hardened steel bearing surface.

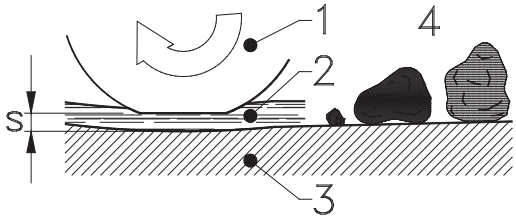

Fig. 10.1

The **thickness** (s) of such a lubricating film which builds up in the bearing depends on the operating conditions but usually amounts only to some tenth of microns (**1/10 µm**), up to a thickness of about 1 micron (**1 µm**).

Normal environment dust that surrounds us has a grain size (4) that is not visible without enlargement. The grain size of such dust particles is up to **10 µm**. Thus, even fine dust particles are larger than the thickness of lubricating film.

Other contaminates, such as sand or metal chips, have even larger particle sizes.

All such particles easily stick to greased or oiled surfaces, (e.g. bearing rings being prepared for mounting). In this way such impurities may enter the bearings.

When the bearing rotates these particles are over rolled and can damage the raceway surfaces seriously.

Where particles have a grain size greater than the lubricating film thickness, localised stresses will occur, causing material fatigue. This may dramatically reduce the bearing service life.

In extreme cases the bearing may be seriously damaged, even before mounting, caused by the penetration of major contaminates.

In the optimum case bearings should be fitted by experienced and qualified personnel, using the correct tools and auxiliary equipment, in a workshop which is a clean and dry environment.

The assembly area must not be located near to any metal removing or dust generating machines or plants, such as grinding, milling, drilling or wood working machines etc.

If the ideal workshop conditions are neither possible nor practical, as in the case of field installations or repair, then the mounting and assembly area must be suitably prepared.

Preparations

Prior to mounting, careful preparation is necessary.

In principle it must be distinguished between the conditions of volume mounting and the needs of repairing or maintenance works.

During volume mounting (i.e. production assembly) the conditions and environment are normally well prepared and organised. With the correct tools and auxiliary equipment provided.

In the case of repairs and maintenance the circumstances are different as each case is individual.

Furthermore, when volume mounting new parts and components are used whilst in case of repairs some used or worn parts have to be recycled. Unfavourable working conditions may apply with maintenance work, sometimes in dirty and dangerous locations that have access difficulties. Therefore, particularly in the latter cases, preparation and meticulous planning is paramount for easy work completion.

Thus the following recommendations are for guidance only and must be adjusted to every individual application or circumstance.

- Before bearing mounting commences one should be familiar with the relevant details of each application. Careful study of all available documentation such as drawings, maintenance manuals, notices, including the clarification of lubricant requirements for the specific machine.

- **All components** of the bearing arrangement, such as shafts, distance rings, spacers, housing components, cups, flanges etc. must be cleaned very carefully. The whole assembly and all adjacent areas must also be clean, dry and free from foreign bodies and contaminates. Also all lubricating facilities (i.e. grease holes, oil pipes, grooves etc.) must be careful cleaned and clear.

- In the case of repairs any exposed machine components and housing cavities should be **covered** to protect them from pollution. Optimum suitable for this is to cover or to wrap the parts with plastic film or clean, fibre-free cloths. Also in the event of longer breakdowns or discontinuation of the mounting or dismounting sequences the machine parts should be totally covered.

- To clean adjacent parts a cleaning paper or suitable fibre-free cloth should be used. **Never use waste cotton or cleaning wool**.

- Bearing seats on shafts and housings, seals and the contacting surfaces of seals including all adjacent machine parts and components should be carefully checked for their condition, especially when dealing with repairs.

- Special attention must be paid to worn bearing seats or seals, burrs, scratches or any other damage to the machine components.

- In the case of maintenance or repair work a thorough inspection of **dimensional and geometric accuracy** of bearing seats or the adjacent parts may be necessary.

- An additional check of the **adjustment of bearing positions** may also be necessary in the case of field installations of large machines or plant. In this way undesired stresses and misalignments of the bearings can be avoided. During repairs any contacting seals such as radial oil seals or V-ring seals should in principle be exchanged.

- To avoid **fretting corrosion** the adjacent parts especially the bearing seats may be lightly oiled or be sprayed with a suitable matter. This applies particularly to loose fits.

- **The bearing should only be unpacked prior to mounting to protect it from contamination.**

Selection of Mounting Method

Rolling bearings are generally mounted to their adjacent parts by means of either sliding or interference fits.

The decision whether a bearing should be mounted either in warm or cold conditions depends mainly on the bearing type, its size and the individual fits that are used for each application.

In the event of volume mounting, some economic considerations should be undertaken. This is why there are no valid general rules to be applied.

In the majority of applications the bearing inner ring is located by a more tight fit than the outer ring. For this reason, rolling bearing **outer rings** are usually pressed into the housing bore in a cold condition. Generally, the mounting of outer rings is by means of either mechanical or hydraulic press.

In the case of very tight interference fits for housings mounting may be made easier, as far as it is practical, by heating up the housing.

To mount bearing **inner rings** onto their shaft seats there are many more possibilities:

Small bearings are normally mounted on their seats in a **cold condition**, this also includes medium-sized bearings with sliding fits or even transition fits.

A **warm mounting** is preferred in the case of large bearings, particularly if the bearings have to be mounted with heavy interference fits.

Larger and very large size rolling bearings are frequently mounted and dismounted with the help of hydraulic devices. Typical are adapter or withdrawal sleeves, frequently used featuring oil ducts. **Hydraulic nuts** are tools for mounting and dismounting larger rolling bearings.

Large-sized NKE bearings are rolling bearings having bore diameters above 250 mm.

Note:

The following basic rules are of extreme importance and must be obeyed when mounting bearings (fig. 10.2):

1) Never apply mounting forces via the bearing rolling elements!

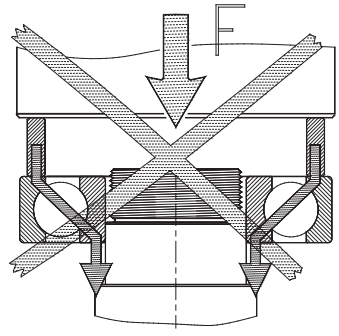

Fig. 10.2

It can easily lead to localised overloading in the contact area between the rolling elements and raceways; this overload damage is not visible and will cause premature bearing failures.

2) Never hit the bearing a surface directly with any hardened tools such as hammers, cotter pin drives etc.

This can cause a breakage or fragmenting of parts of the hardened bearing rings.

For correct fitting recoil free hammers should be preferably used.

Hammers with lead or plastic heads that may split, however, are not appreciated due to the risk of particles coming off and getting into the bearing.

Mounting of Bearings in Cold Condition

Small and medium sized bearings are usually mounted in a cold condition as they do not normally have tight fits.

The bearings are mounted using either presses or by hammer strikes.

In principle the bearing that has the tighter fit must always be mounted first.

Impact sleeves and impact bushes

For mounting small and medium-sized bearings **impact sleeves** and **impact bushes** have been proven to be satisfactory tools. These are sets of discs and rings made from a special impact-proof plastic and lengths of aluminium tubes that fit to them.

These tool sets used fit the standardised bearing ring sections.

Impact bushes provide a quick and simple method of mounting small bearings, even when volume mounting bearings.

In repair shops complete sets of **impact bushes** have proven to be optimum universal devices when frequently dealing with different bearing types and sizes, particularly in electric motor rewinding shops.

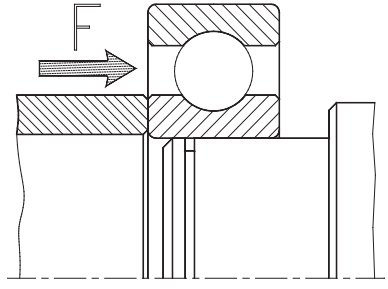

Fig. 10.3

Fig. 10.3 shows the press mounting of a radial deep groove ball bearing on a **tight shaft fit** using an appropriate **impact sleeve**.

The use of an effective **impact sleeve** enables the transfer of the mounting force via the bearings inner ring only.

This ensures damage of the bearing or the shaft is reliably eliminated.

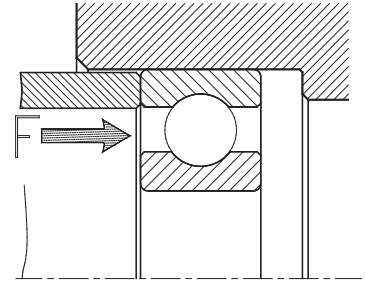

Fig. 10.4

Press mounting of the same bearing into a **tight housing fit** (fig. 10.4).

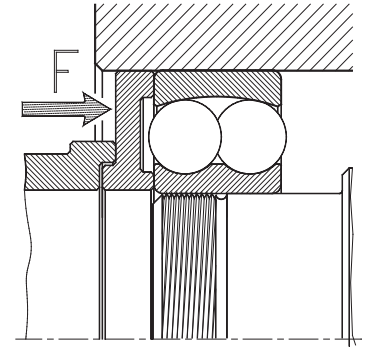

Fig. 10.5

If non-separable bearings are to be mounted simultaneously on to the shaft and into the housing seat, both bearing rings have to be supported by a satisfactory **mounting washer** (fig. 10.5).

Note:

In the case of some bearing types, certain parts such as rolling elements or cages may protrude beyond the bearing side faces. This must be carefully checked when selecting such a mounting washer.

Press Mounting of Bearings

The mounting of small and medium sized rolling bearings may be completed quickly and simply by using either mechanical or hydraulic presses.

For such cases the bearing seats of shaft and housing should be prepared by lightly oiling.

Also when applying this method the general rules that the introduction of forces via the rolling elements must be avoided. For these reason satisfactory auxiliary sleeves, washers or mounting bushes have to be used.

When using presses misalignment of parts particularly must be avoided (fig. 10.6).

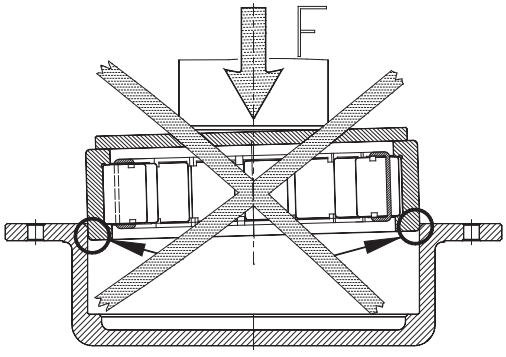

Fig. 10.6

In the case of applying mounting forces to misaligned bearing rings, localised damage to the housing seat may occur at the marked areas.

Such damage may appear as ridges and result in sheared material contaminating the bearings and causing serious damage.

Because misalignment is possible even in the case of loose bearing fits, the bearings have to be centred and aligned very carefully, for reference (fig. 10.7).

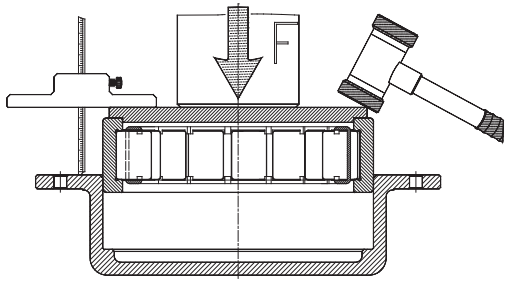

Fig. 10.7

When hydraulic presses are used, the setting of a certain pressure relief has to be recommended to avoid choking caused by defects on the bearing or in the housing.

As any additional and unnecessary dismounting and removal of the bearing from its position is time consuming, uneconomical and interrupts the mounting process, good mounting practise is paramount.

Simplification of Bearing Mounting by Constructive Measures

The mounting of bearings may be completed effectively and efficiently using good design practise.

Such measures are justified in the case of applications that only require minor maintenance.

Examples of such aids are screw threads on shafts and housings, which may also be used for mounting purposes.

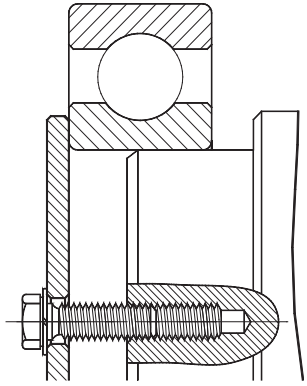

Fig. 10.8

Figure 10.8 shows how pilot holes or even other tapped holes may be used to support the mounting of bearings onto shaft seats.

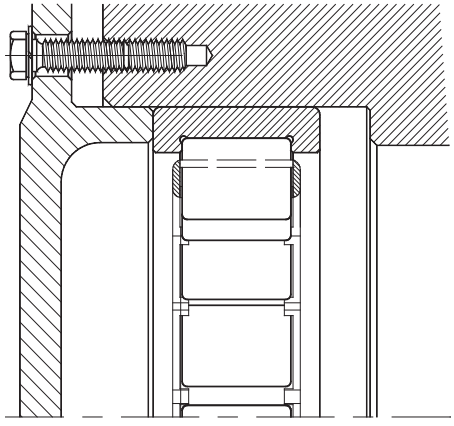

Fig. 10.9

Also necks and fastening threads of cups and housings must be used additionally to assist the mounting of bearing outer rings, (fig. 10.9).

Insertion of Shafts in the Case of Separable Bearings

When mounting separable bearing types, such as needle roller bearings, tapered roller bearings or cylindrical roller bearings, their outer and inner rings may be fitted separately.

This is a considerable advantage with volume assembly mountings. So, for example, when mounting gearboxes or electric motors, the bearing inner rings may be pressed onto the shafts or the armature, respectively, whilst the associated outer rings may be mounted in their housings later.

Although during the final assembly of the whole unit special care must be taken when the pre-assembled shaft is inserted into the housing to avoid any possible misalignments of the respective parts (fig. 10.10).

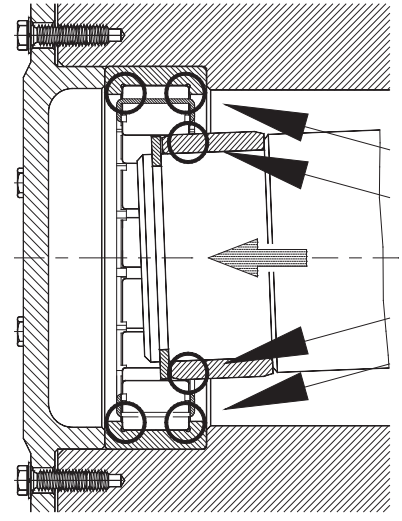

Fig. 10.10

A misaligned mounting as shown in fig. 10.10 will inevitably cause scratches, indentations and plastic deformations to the bearing raceways or their flanges; such damage is not normally visible and will result in material fatigue in the affected areas and premature bearing failure.

This damage risk can be easily avoided at mounting by rotating the shaft with care, during assembly, as shown in fig. 10.11.

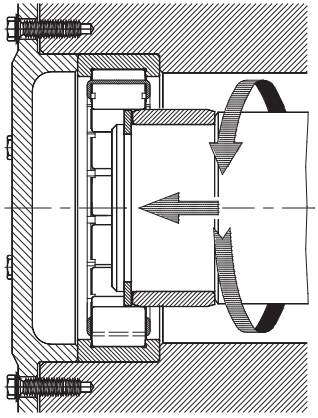

Fig. 10.11

Roller Drop in Cylindrical Roller Bearings

When mounting separable cylindrical roller bearings, fitted with cages, special attention must be paid to the looseness of the rollers. This specific behaviour is unique and is caused by the internal design of the bearing cages.

All cylindrical rollers retained by a cage require a certain clearance, the so-called "**pocket clearance**". The pocket allows the roller to drop and hang when it is not guided by the ring. Depending on the specific cage type this pocket clearance may be large or small.

When the associated inner or outer ring is in its final position the pocket clearance is negated. But when a bearing inner ring is removed or the bearing outer ring with roller set is fitted into the housing seat separately, the upper rollers will drop and hang.

That is why special care must to be taken when assembling the shaft in this way.

The hitting of roller end faces by the shaft must be avoided at all times

A cheap, simple and very effective solution of this potential problem is provided by the use of **mounting sleeves**, as shown in fig. 10.12:

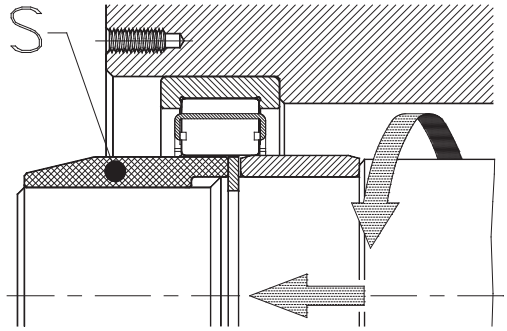

Fig. 10.12

Mounting sleeves (S) are simple-shaped hollow tubes made from various materials (e.g. plastic, nylon and card board etc.).

The sleeve has to be designed in such a way that it is able to guide and centre the shaft during assembly and to lift the loose rollers.

Mounting of Bearings Having Filling Slots

There are several bearing types which have a filling slot in one of their faces to accept the maximum amount of balls.

Examples for such types are the so-called "Max-Type" deep groove ball bearings, and some double row angular contact ball bearings fitted with cages.

In the case of these bearing types it must be noted that the direction of the major thrust load must be opposite to the side that has the filling slot.

Mounting of Bearings with Tapered Bore

Several different bearing types are frequently used with tapered bores mainly self aligning ball bearings and spherical roller bearings. These bearings are mounted usually by means of adapter or withdrawal sleeves directly onto fine turned shaft seats, bright drawn bars or simple round stock.

In the case of high precision cylindrical roller bearings of the series **NN 30**, that are mounted directly onto tapered journals, the tapered shaft is also used for very accurate adjustment of the bearing operating clearance, $\mathbf{R_2}$, (fig. 10.13).

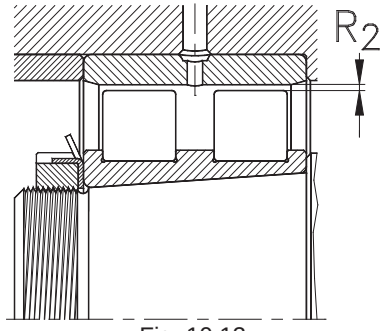

Fig. 10.13

When mounting bearings that have tapered bores on a tapered journal, considerable expansion of inner ring can occur (fig. 10.14).

Such an expansion can reduce the initial normal bearing clearance.

If this effect is overlooked, undesired radial preloading of the bearing may result. For this reason bearings with tapered bores have, in principle, a larger initial clearance compared to bearings with the same cylindrical bore, even for the same clearance group.

Example:
Self aligning ball bearing **1210**, “normal” clearance group:

for **cylindrical** bore:	14 to 31 µm
for **tapered** bore:	22 to 39 µm

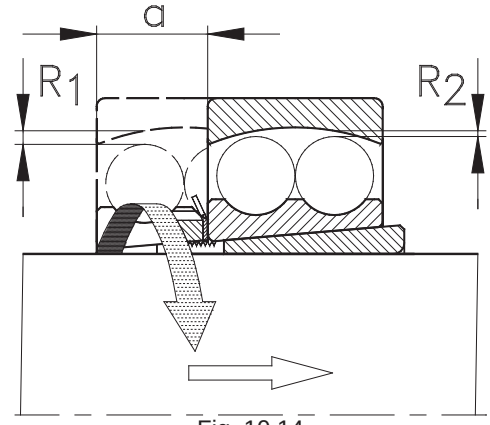

Fig. 10.14

where:

$\mathbf{R_1}$	= initial radial clearance before mounting
$\mathbf{R_2}$	= remaining radial clearance after mounting
a	= axial displacement

The magnitude of inner ring expansion depends upon the bearing size, the axial displacement during mounting (**a**) and the angle of the taper.

The standard taper, indicated by suffix “**K**” amounts to **1:12**, which means an inclination of 1 mm of each 12 mm gauge length.

Several bearing types with less sectional height have less taper inclination, **1:30**. These tapers are identified by the suffix “**K30**”.

To avoid any potential undesired preloading to the bearing, the remaining bearing play ($\mathbf{R_2}$) after mounting must be checked.

Because of the fact that there exists a simple relationship between the taper angle, the axial displacement and the resulting clearance reduction please see the recommendations for values of remaining bearing clearance ($\mathbf{R_2}$) listed on **Table 10.1** for **self aligning ball bearings** and **Table 10.2** for **spherical roller bearings**.

Mounting of Self Aligning Ball Bearings with Tapered Bore

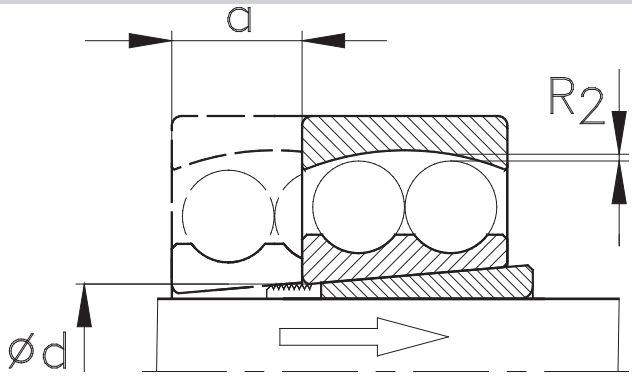

Bore ∅ d [mm]	Axial displacement a [mm] for bearings of series				Mean mounted clearance R_2 [mm] for clearance group	
	12K	22K	13K	23K	CN (normal)	C3
20	0,22	-	0,23	-	0,010	0,020
25	0,22	0,22	0,23	0,23	0,010	0,020
30	0,22	0,22	0,23	0,23	0,010	0,020
35	0,30	0,30	0,30	0,30	0,010	0,020
40	0,30	0,30	0,30	0,30	0,010	0,020
45	0,31	0,31	0,34	0,33	0,015	0,025
50	0,31	0,31	0,34	0,33	0,015	0,025
55	0,40	0,39	0,41	0,40	0,015	0,030
60	0,40	0,39	0,41	0,40	0,015	0,030
65	0,40	0,39	0,41	0,40	0,015	0,030
75	0,45	0,43	0,47	0,46	0,020	0,040
80	0,45	0,43	0,47	0,46	0,020	0,040
85	0,58	0,54	0,60	0,59	0,020	0,040
90	0,58	0,54	0,60	0,59	0,020	0,040
95	0,58	0,54	0,60	0,59	0,020	0,040
100	0,58	0,54	0,60	0,59	0,020	0,040
105	0,67	0,66	-	-	0,025	0,055
110	0,67	0,66	0,70	0,69	0,025	0,055
120	0,67	-	-	-	0,025	0,055

Table 10.1

Mounting of Spherical Roller Bearings with Tapered Bore

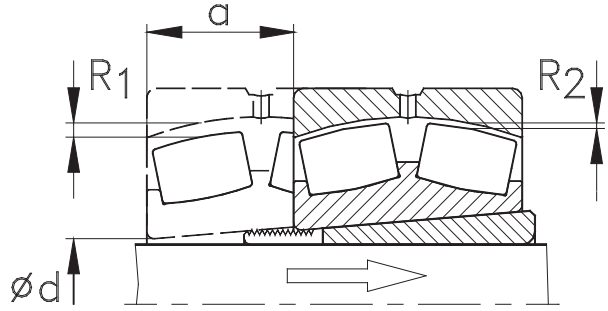

Bore diameter d [mm]		Clearance reduction [mm] ΔR ($R_1 - R_2$)		Axial displacement a [mm] for taper 1:12		Axial displacement a [mm] for taper 1:30		Minimum mounted clearance R_2 for bearings of clearance group		
>	≤	min	max	min	max	min	max	CN (Normal)	C3	C4
24	30	0,015	0,020	0,3	0,35	-	-	0,015	0,020	0,035
30	40	0,020	0,025	0,35	0,40	-	-	0,015	0,025	0,040
40	50	0,025	0,030	0,4	0,45	-	-	0,020	0,030	0,050
50	65	0,030	0,040	0,45	0,6	-	-	0,025	0,035	0,055
65	80	0,040	0,050	0,6	0,75	-	-	0,025	0,040	0,070
80	100	0,045	0,060	0,7	0,90	1,7	2,2	0,035	0,050	0,080
100	120	0,050	0,070	0,75	1,1	1,9	2,7	0,050	0,065	0,100
120	140	0,065	0,090	1,1	1,4	2,7	3,5	0,055	0,080	0,110
140	160	0,075	0,100	1,2	1,6	3,0	4,0	0,055	0,090	0,130
160	180	0,080	0,110	1,3	1,7	3,2	4,2	0,060	0,100	0,150
180	200	0,090	0,130	1,4	2,0	3,5	5,0	0,070	0,100	0,160
200	225	0,100	0,140	1,6	2,2	4,0	5,5	0,080	0,120	0,180
225	250	0,110	0,150	1,7	2,4	4,2	6,0	0,090	0,130	0,200
250	280	0,120	0,170	1,9	2,7	4,7	6,7	0,100	0,140	0,220
280	315	0,130	0,190	2,0	3,0	5,0	7,5	0,110	0,150	0,240
315	355	0,150	0,210	2,4	3,3	6,0	8,2	0,120	0,170	0,260
355	400	0,170	0,230	2,6	3,6	6,5	9,0	0,130	0,190	0,290
400	450	0,200	0,260	3,1	4,0	7,7	10,0	0,130	0,200	0,310
450	500	0,210	0,280	3,3	4,4	8,2	11,0	0,160	0,230	0,350
500	560	0,240	0,320	3,7	5,0	9,2	12,5	0,170	0,250	0,360
560	630	0,260	0,350	4,0	5,4	10,0	13,5	0,200	0,290	0,410
630	710	0,300	0,400	4,6	6,2	11,5	15,5	0,210	0,310	0,450
710	800	0,340	0,450	5,3	7,0	13,3	17,5	0,230	0,350	0,510
800	900	0,370	0,500	5,7	7,8	14,3	19,5	0,270	0,390	0,570
900	1000	0,410	0,550	6,3	8,5	15,8	21,0	0,300	0,430	0,640
1000	1120	0,450	0,600	6,8	9,0	17,0	23,0	0,320	0,480	0,700
1120	1250	0,490	0,650	7,4	9,8	18,5	25,0	0,340	0,540	0,770

Table 10.2

In every case it is extremely important that after locking the shaft nut which secures the bearing, the **final bearing clearance (R_2)** must be re-checked to confirm the correct value.

Depending on the relevant mounting situation and the individual features of the specific application such inspection is completed either in a **direct** or **indirect** way. The indirect method is possible by a measurement of the **axial displacement**. A **direct** method of the final bearing clearance is completed using **dial gauges**, (fig. 10.15) or, for larger spherical roller bearings, by use of **feeler gauges**.

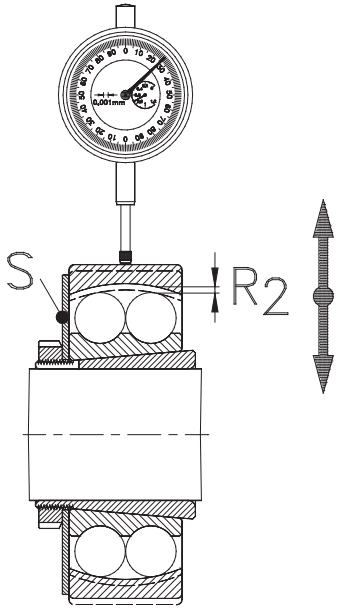

Fig. 10.15

When using dial gauges they must be adjusted to the outer ring of the mounted bearing (see fig. 10.15).

In the case of self aligning bearings, (i.e. self aligning ball bearings and spherical roller bearings), the use of **auxiliary supporting washers (S)** is recommended to prevent the outer ring skew (fig. 10.15).

To measure the **final bearing clearance (R_2)** the outer ring of the mounted bearing must be moved to the extremes of its position in a radial direction. For larger bearings, (e.g. large spherical roller bearings), such a procedure is normally impossible.

In these cases, however, a cross check of the remaining clearance is completed using **feeler gauges** with consideration to the recommended minimum values for the final bearing clearance (**R_2**, table 10.2).

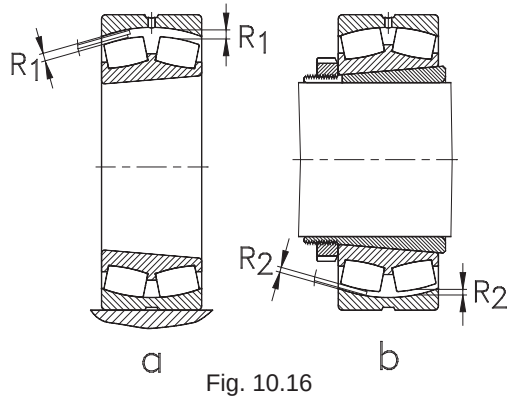

Fig. 10.16

For such a measurement the **initial clearance (R_1)** of the unmounted bearing must first be determined.

This may be done according to the specific circumstances either by using **dial gauges** or, for larger bearings using feeler gauges which are for practical purposes sufficiently accurate.

For this, place the bearing upright on a flat, clean base and rotate its inner ring by hand several times to provide an optimum contact of the rolling elements on the raceways.

When the bearing stands upright on its base, the **actual clearance R_1** (i.e. gap) between the outer ring raceway and the uppermost rolling element on a fixed axial centreline is easily measured using feeler gauges of various thickness (fig. 10.16a).

The thickest feeler gauge that can be inserted indicates the actual amount of initial bearing clearance.

The remaining bearing clearance should be frequently checked during the mounting.

Because of the fact the bearing already sits on its shaft at this stage of mounting, the actual bearing clearance is determined by measuring the final gap between the roller and the outer raceway on a fixed radial centreline (fig. 10.16b).

The minimum values of **final bearing clearance (R_2)** stated in table 10.2 are based on clearance values that lie on their lower limits.

The minimum values listed in table 10.2 must not be undercut.

In many cases a reliable measurement of the remaining bearing clearance using the above procedure may cause some difficulties.

Furthermore, under certain conditions of mounting this procedure may be time-consuming and impractical.

In such cases the remaining final bearing clearance (R_2) may be determined using the indirect method (i.e. axial displacement measurement “a”).

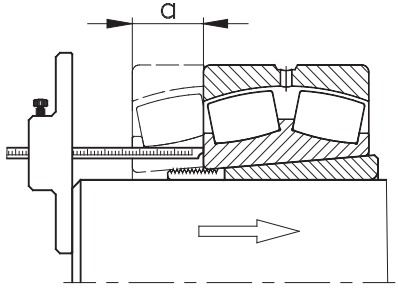

The actual distance of displacement “**a**” is measured using effective measuring instruments such as dial gauges, depth gauges or even simple calliper rulers. This may depend on the particular application.

In this way volume production mounting may be organised in a very efficient and economic way by using the recommendations in tables 10.1 and 10.2. It must also be considered, however, that these values apply to solid steel shafts only. The mounted bearing has to allow for easy rotation and skewing of the outer ring in all cases.

Mounting Bearings by Using Oil Injection Method

Larger and very large rolling bearings may be mounted in a much simpler way by using oil to force the bearing either on or off its seat.
To fit bearings by the oil injection method, called “**hydraulic nuts**”, (fig. 10.18), are used.

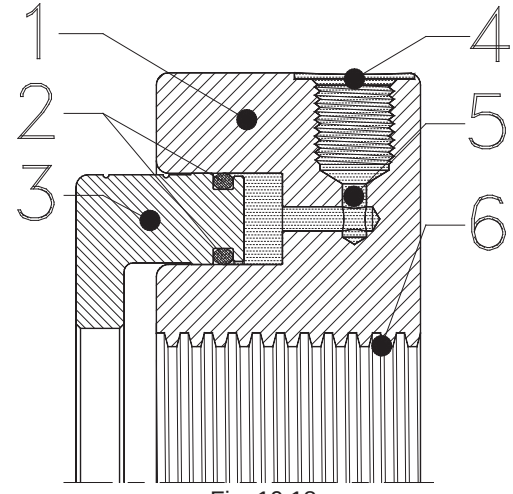

Fig. 10.18

They consist of a solid body piece (**1**) that features appropriate threads (**6**). The body piece has a circular groove in one face that accepts an annular piston ring (**3**).

Via the connecting threads (**4**) and oil ducts (**5**) oil is injected into the groove at a high pressure forcing the piston outwards. Two O-rings, (**2**) sitting in circumferential grooves on the piston effect the sealing of the oil groove against the abutting surfaces.

When mounting bearings, in conjunction with adapter and withdrawal sleeves or taper seatings, the hydraulic nut must be fully screwed and secured to the appropriate abutment face. It is important the annular piston is located correctly and secure prior to assembling the hydraulic nut.

To provide easier screw rotation, hydraulic nuts normally have 2 or 4 blind holes equally spaced in their outside face and for the larger sizes 4 to 8 blind holes around the outside circumference. These features allow the use of mechanical equipment (i.e. tools, drifts, levers, hook or impact spanners.) for securing the nuts.

The piston stroke for most hydraulic nuts is designed in such a way that the correct mounting of a bearing is completed in a single stage. To mark the maximum permissible piston stroke most hydraulic nuts have two narrow circumferential grooves formed into the piston outer diameter.

When charging the hydraulic nut with oil the piston is displaced axially and creates a considerable thrust force which presses the bearing either onto or off its seat position. Please bear in mind the clearance reduction caused by that axial displacement and check the residual clearance after each mounting.

When the bearing is located on its seat correctly the return valve on the oil pump should be opened. The pressure inside the hydraulic nut will then drop immediately.

Following mounting and rechecking the bearings final clearance the hydraulic nut must be replaced by a “normal” lock nut.

Note:

When mounting or dismounting bearings using the oil injection method huge pressures are applied, please read the operating instructions carefully and consider the recommendations and safety instructions provided by the supplier of the hydraulic equipment.

Mounting of Bearings by Heating

In cases where mounting of bearings in the cold condition is not possible or where the oil injection method is not practical heating of the bearing or even individual bearing rings may be of advantage.

This method is widely used for ease of mounting the bearings or even other machine components on interference fits, particularly on tight shaft seats (i.e. heavy interference).

When heated the bearing rings expand, due to the thermal coefficients, and thus the diameters increase, which enables easier bearing mounting.

Immediately after the ring sits on its comparatively cold shaft seat it will shrink to its correct diameter by cooling down to the ambient temperature.

The following recommended methods and procedures for mounting rolling bearings are also satisfactory for other machine parts, such as cog wheels, bushes or disks which may also be mounted on interference fits.

Required Heating

The amount of heat required for a certain application depends on the actual ring sizes and shaft fit. Usually the heating of bearing rings to temperatures between 90°C to 110°C (197°F to 230°F) is sufficient for a totally problem-free mounting.

Note:

When heating rolling bearings there are some basic rules to be strictly adhered to:

a) **Never heat standard rolling bearings above 120°C (248°F)**. Higher temperatures may cause some structural changes in the ring material causing undesired dimensional and geometrical changes with no advantages for mounting the bearing.

b) Sealed or shielded bearings (e.g. bearings with suffix RS, -2RS, -2Z, -2LS, LFS,-2LFS...) should never be heated by using the oil bath method.

c) When heating bearings always ensure there is **effective temperature controls** to protect the bearing rings from excessive heat.

It is particularly important when mounting bearings that optimum planning and preparation of the work area is undertaken as prolonged handling and badly located mounting equipment and tools can result in premature cooling this obviously negates the object of mounting using the heat method.

Important:

Never heat rolling bearings or even separate bearing rings directly by means of open flames, blow and welding torches or soldering irons

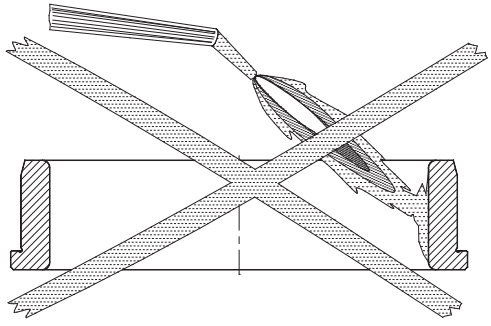

Fig. 10.19

Even with extra special care it is not possible to control the bearing or ring temperature uniformly and consequently localised overheating can never be excluded (fig. 10.19).

Approved Heating Methods

Heating in Oil Baths

The bearings are placed in an **oil bath** and heated to the required mounting temperature, (fig. 10.20).

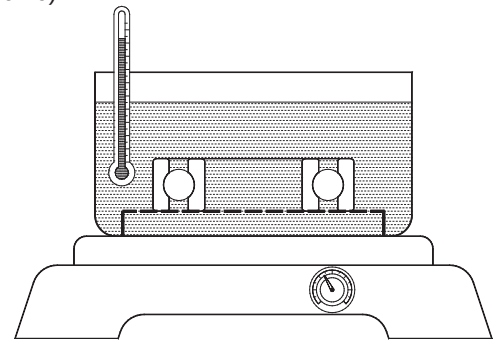

Fig. 10.20

This provides a very uniform method heating of the parts to be mounted and allows the parts to be held at specific controlled temperatures, to equalise, by means of a thermostat.

When applying the oil bath heating method some points should be carefully considered:

- Long life thin machine oils should be used.
- Only use machine oils that feature flash points above **250°C (482°F)**.
- The facility to effectively control oil temperature is paramount.
- If the oil bath is not in use for long periods, the oil tank must be covered to prevent oil contamination and pollution.

All oil undergoes an accelerated ageing due to frequent heating.

This results in the build up of oxidation particles that bind together with the dust that has entered the oil. This sediment sinks onto the oil tank bottom.

To avoid the possible entry of such particles, into the parts to be heated, tank filters should be used (fig. 10.20), or the bearings or rings should be suspended on screens or with simple hooks (fig. 10.21).

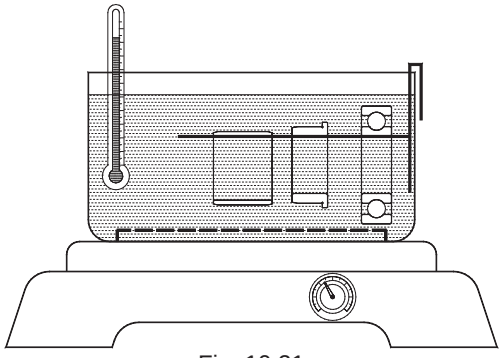

Fig. 10.21

Hot Plates and Boxes

Especially when mounting a large number of bearings or when frequently mounting numbers of bearings of different sizes **hot plates** or **heating boxes** may be satisfactory devices. In either case temperature control is very necessary.

Depending on their dimensions, **heating boxes** may also be used to heat up small housings or other different machine components.

Hot Plates

Small and medium sized bearings are frequently heated using electric powered **hot plates**.

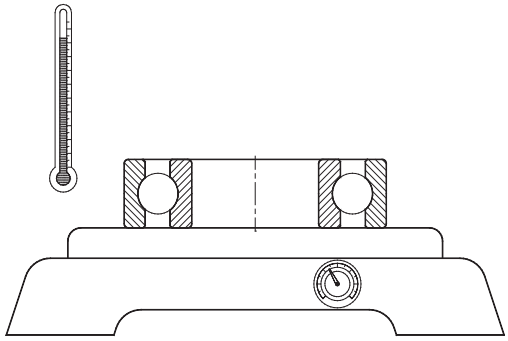

Fig. 10.22

These hot plates also require temperature control measurements, or at least the actual temperature of the heated part must be carefully checked.

Optimum devices for production mounting of bearings are special heating plates that feature temperature selection and automatic thermostatic controls.

Generally, they incorporate a cover to protect the bearings from cooling down to quickly.

Thermo Rings

Another auxiliary device for the mounting of separate needle roller or cylindrical roller bearing inner rings is represented by the so-called **thermo rings**.

Thermo rings are simple slotted rings made from solid aluminium with thermal insulated handles (fig. 10.23).

The bore diameter of the thermo rings is adjusted to the raceway diameter of the ring type which is to be heated.

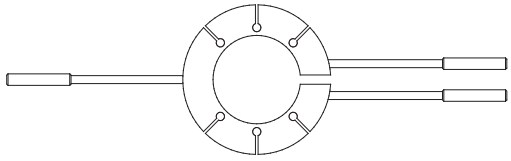

Fig. 10.23

Normally these rings are designed for dismounting bearing rings, although they can be very helpful for removing press-fitted or jammed rings.

When applying the thermo ring method, the raceway of the ring to be fitted has to be lightly oiled with thin machine oil.

The heated thermo ring must surround the bearing ring and is clamped by the handles.

The bearing ring expands due to the transfer of heat and, therefore, enables simple mounting, even with tight or interference fits.

The bearing ring must be tightly held on the contact surface until it has totally cooled down.

This cooling will occur very quickly because of the comparatively cold shaft. The thermo ring, however, should only be removed when the bearing ring sits on its shaft seat tightly.

The heating temperature of thermo rings or the heat duration has to be specified by practical experience as these parameters are influenced by the individual operational conditions such as ring section, mass of shafts and rings etc.

Induction Heating

Induction heaters (fig 10.24) are the optimum for volume production mounting (e.g. gearboxes, brake discs, electric motors etc.) where tight or interference fits apply. Additionally, they are very efficient and effective particularly when used by maintenance and repair workshop personnel (e.g. motor rewinders).

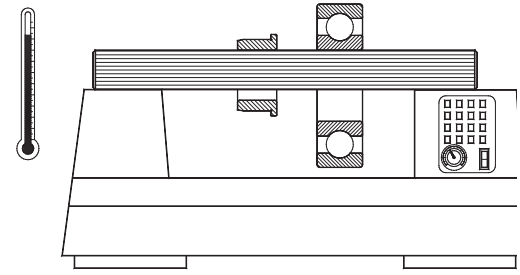

Fig. 10.24

For this method, the parts to be mounted are heated to the required temperature by using the induction effect.

This method is proven to be suitable for all types of rolling bearings providing an economic, quick and uniform heating.

Induction heaters are available in several different designs and performances.

The heater has to fulfil the following minimum requirements:

- automatic demagnetisation after heating
- temperature selection possibility and temperature control
- automatic temperature control

With more modern designs the heating may be optionally controlled either by selecting the temperature or indirectly via the time duration of heating the part.

Depending on the individual manufacturer the basic equipment supplied may vary. For the optimum utilisation of induction heaters it is recommended several yokes with different section be used.

Some types of induction heaters have yokes that allow a skewing sideways. This design feature provides a very simple method of handling the heated parts.

Warning:

All types of induction heater create a very strong magnetic field.

Please read carefully the operating instructions and consider the recommendations and safety instructions provided by the supplier of your induction equipment. Never use inductive acting equipment if you use a pace-maker!

Always wear protective gloves when working with induction heaters.

To mount the heated parts position them carefully and smoothly onto the seat up to and against the abutment face or shoulder, pressing the part firmly against the contacting surface until the part has cooled down to the ambient temperature. This is important to ensure the correct positioning of the bearing.

Mounting of Matched and Adjusted Bearings

Several bearing types, such as tapered roller bearing and angular contact ball bearing, are used in pairs.

These pre-set bearing units, (e.g. tapered roller bearing units or complete spindle bearing sets), are normally precisely matched by the manufacturer to enable a quick and simple mounting thus avoiding the time consuming and skillful adjustment of the required clearance or preload.

When a single bearing or bearings of the universal matched design are used the requisite clearance or preload must be adjusted during mounting according to the individual application and bearing position.

Values for the individual bearing clearance or preload are defined either by design or, in the case of maintenance work the instruction manuals.

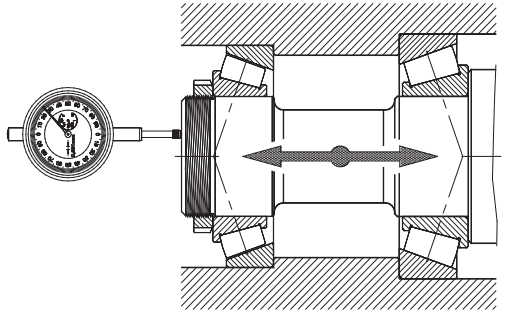

Fig. 10.25

Fig. 10.25 shows the adjustment of a defined axial clearance of a pair of tapered roller bearings.

In this example the axial clearance is adjusted by the use of a **lock nut**.

Prior to the bearing adjustment it is recommended to rotate the shaft several times by hand to ensure that the tapered rollers sit correctly in the guiding ribs of inner ring.

For a measurement of the actual axial clearance the shaft must be moved axially from one end of the stroke to the other (i.e. extremes).

An alternative method of achieving the necessary bearing assembly adjustment is the use of calibrated master spacers.

These spacers or shims are of predetermined widths which when fitted between the respective bearings determine the correct axial clearance (fig. 10.26).

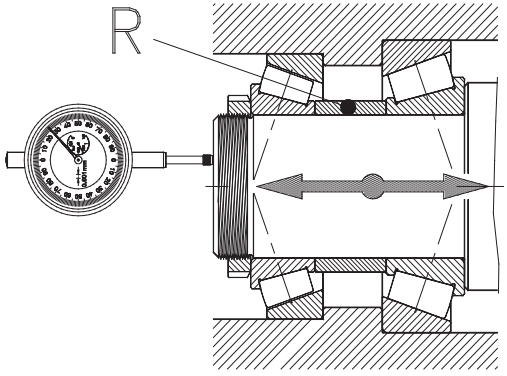

Fig. 10.26

After the determination of the actual axial clearance the master spacer is removed and replaced by an **appropriate spacer** "**R**" to become part of the bearing arrangement (fig. 10.26).

In the case of **face-to-face** arranged bearings and loose housing fits the axial play can be adjusted using shims to adjust the clearance, (fig. 10.27).

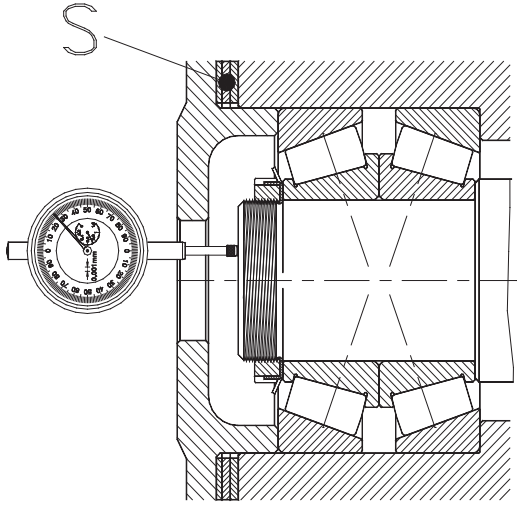

Fig. 10.27

In the initial stage of measurement the width of the required **shims** (**S**) has to be selected greater than required to enable a measurement of axial clearance.

With the resulting clearance value the appropriate shim width for a specific clearance is determined.

For volume **mounting** other adjusting procedures and methods are used, such as adjusting or preload bearings by estimating the angle of rotation of a hook spanner used to tighten the lock nut or tightening of the lock nut by means of a torque wrench.

In several applications, the frictional torque of a bearing unit is used as an indicator of a certain preloading condition.

All the methods commonly used, determine the optimum values empirically, this means by extended trials and field tests.

Mounting of Multi-Row Bearings

Special care and attention must be made when mounting bearing units or multi-row bearings as they can consist of several single components that may be mounted separately (Fig. 10.28).

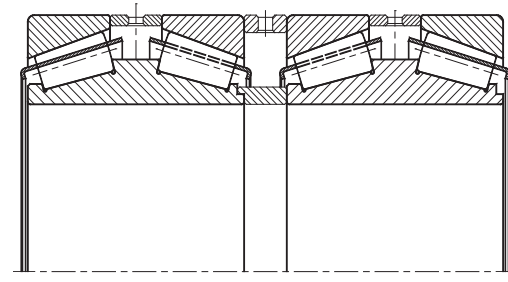

Fig. 10.28

Fig. 10.28 shows a four-row NKE tapered roller bearing for steel rolling mills.

Additional to the general guidelines and recommendations, previously stated, a certain mounting procedure may be necessary for single bearings or in the case of bearing sets and separable bearing components a specific mounting sequence.

For example, the four-row NKE tapered roller bearing shown in fig. 10.28 has rings that have been matched individually. That is why to avoid all possible confusion during mounting under no circumstances should bearings or bearings with separable parts be mixed.

Normally to assist and eliminate the mixing of bearings parts they are etched or marked, particularly in the case of bearing sets and matched tapered roller bearing when each individual separable part is clearly marked.

Greasing of Bearings

In many grease lubricated bearing arrangements their greasing is almost impossible once the bearings are mounted.

That is why the lubricating grease must be applied before inserting the bearings into their housings.

Note:

With frequent contact many people are allergic to mineral oils or greases. Please wear safety clothes and protective gloves always when dealing with lubricants and avoid any excessive skin contact to lubricating oils or greases.

Again, some basic rules must be considered when greasing rolling bearings:

- Only remove the **bearing** from its original package prior to its mounting.

- Grease them as little as possible before mounting to protect the bearings from getting contamination.

- The **preservation agent** adhering to the bearing may be left if using mineral lubricants as the preservation agent is compatible with all normal mineral lubricating oils and greases.

- When **synthetic special lubricants** are used the bearings should be washed out thoroughly prior to greasing and mounting.

- To clean the bearings of their preservation, adequate cleaning agents, such as **benzine** or **kerosene** should be used.

- Synthetic lubricants are used at very high or extremely low temperature applications, respectively.

- In general the preservation agent which adheres to the bearing bore and outside di-ameter, at least, should be removed prior to mounting. The use of a clean non-fibre cloth or paper is recommended to remove this preservation agent. Never use cotton waste or wool.

- **Large rolling bearings** are often preserved with a comparatively thick coating of preservation grease, the so-called **hot preservation**. This grease, however, must be removed in every case.

Note:

The preservation agent itself is not a lubricant and, therefore, it will not perform any lubricating features or behaviours!

- Bearings that are already greased must be carefully protected until they are mounted. The use of polythene film or similar material is suggested to protect the bearings from the various contaminates.

- The designated **lubricants** must always be stored in tightly closed containers to avoid any penetration of foreign matters.

- The lubricant containers, following the removal of lubricant, must always be immediately closed.

- The lubricant should always be checked for its condition prior to application with particular attention to the presence of any pollution, water or signs of ageing.

- Please be aware the use of old or contaminated lubricants may cause premature bearing failures.

The volume of lubricating grease to be applied depends mainly on the operating speed of the bearing, as already described in the chapter "**Lubrication of Rolling Bearings**".

For general application in every case the free space within the bearing itself has to be **fully filled** with lubricating grease.

The grease filling volume applied to the housing cavities should be determined using the recommendations given in table 10.3.

Speed ratio *)		Grease volume **)
>	≤	[%]
-	20	80 ÷ 90
20	75	30 ÷ 50
75		25

Table 10.3

*) as a percentage of the speed ratings for grease lubrication given in product tables.

**) as a percentage of the bearing housing cavities.

Under very special operating conditions sheave bearings (e.g. cable car or crane pulleys etc.) which run at very low speeds the housing cavities may be fully grease filled to eliminate the formation of water condensation.

A special care must be taken at all times when dealing with lubricants. As fine particles, (e.g. dust, sand grains, small chips etc.) will adhere to greased or oiled surfaces.

All contamination that is retained by a lubricant will be brought directly into the bearings most sensitive area, its raceways.

Fitting of Seals

On completion of mounting the bearings and their associated components, seals also frequently have to be mounted.

Rubbing seals (i.e. O-rings) or radial oil seals can be difficult to fit due to the relatively high friction between **synthetic rubber (NBR)** on steel.

This is why dry mounting of such seals may lead to some fissures on the seals sensitive sealing lips. This matter is easily overcome by lightly oiling or greasing the sealing surfaces by using machine oil or standard bearing grease prior to fitting.

Many designs of contacting seals, such as the double-lip seals as used in split plummer block housings, require a grease filling of the total free space between their sealing lips to gain optimum sealing performance.

The greasing or oiling of rubbing seals reduces the amount of friction at the initial bearing rotation (i.e. start up).

Commissioning of Bearing Arrangement

Before starting up a bearing arrangement it is recommended to rotate the shaft several times manually, as far as this is possible, to ensure smooth and free running.

If **grease lubrication** is planned, the grease volume to be inserted into the housing cavities is completed after the total bearing arrangement is assembled, but prior to the mounting of enclosure, caps, etc.

In the case of oil lubrication, however, the machine must be fitted completely with all associated machine components and seals prior to applying the lubricating oil according to manufacturer's instructions.

In several cases it may be necessary to clean the oil feed pipes using flushing oil.

Appropriate information should be recorded in maintenance manuals or mounting instructions of the specific machine.

Note:

In the case of oil lubrication an adequate oil supply to the bearings must be ensured prior to rotation of the bearings or damages through lack of lubrication at the initial starting-up can occur.

Thus, the oil circulation has to commence prior to rotation of the shafts.

At the **starting-up period** the speed must only be increased slowly up to the projected operating speed.

Every bearing, ideally, requires an initial running-in period.

During this period, the micro roughness of the bearings raceways becomes well distributed.

This **running-in** process can result in a short term increase in running noise, particularly, when dealing with grease lubricated bearing and a somewhat higher operating temperature.

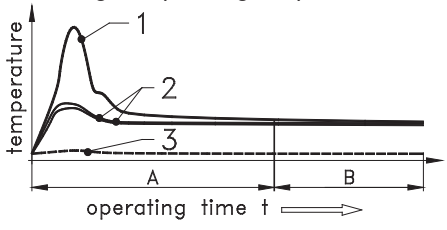

Fig. 10.29

Fig. 10.29 shows a very typical temperature pattern during the run-in period for a grease lubricated bearing arrangement:

where:

- **A** duration of run-in period
- **B** holding temperature
- **1** temperature course measured on a totally new bearing
- **2** temperature course of regreased bearings that are already run-in
- **3** course of ambient temperature

The duration of run-in period may vary depending on the particular application from few operating hours up to a maximum of 48 hours. Thereafter the operating temperature and the running noise should decrease to a normal level, the so-called **holding temperature**.

As the magnitude of the holding temperature is determined by a number of influencing factors there is no general rule or formula to apply.

Although practical experience gained from the same or similar equipment may be used as a base for the evaluation of the condition of the actual bearing and arrangement.

In every instance the bearing positions must be carefully checked for operating temperature, running noise and running behaviours after the machine or motor is running.

The event of considerably high temperatures or running noise may indicate some misalignment of the bearing, or contaminates in the bearings or lubricant, contacting and affecting adjacent parts.

In the event of any doubts the whole bearing arrangement must be cross checked carefully.

It has been proven that an extensive recheck is always cheaper than any bearing defect.

Condition Monitoring

Rolling bearings in many applications are functional critical parts of a machine or plant that may be vital to the process.

These rolling bearings are, generally, extremely reliable although they do not have an indefinite life.

Therefore, for more important applications and arrangements it may be sensible to incorporate at the design stage a bearing condition monitoring feature.

Such monitoring enhances considerably the operational safety of a plant providing the possibility of planned preventive maintenance by recognising potential failure sources in their very early stages.

However, the decision to effectively monitor bearing positions is dependant upon the importance of each individual bearing arrangement and a simple cost analysis.

Bearing monitoring can be applied using very rudimentary methods with some success, such as regular time controlled recording of bearing behaviours and operating temperatures usually actioned by experienced personnel who manually determine and confirm the “normal” running conditions without any sophisticated measuring equipment.

A more reliable method of condition monitoring, however, is provided with permanent supervision of specified parameters, such as operating temperature, or noise vibration levels.

There are also several complex monitoring systems available which provide continual monitoring and online computerized evaluation of the data.

Such equipment and systems are based on the detection of changes in the vibration characteristic of rolling bearings which may indicate a change of their operation conditions, too.

The vast majority of all rolling bearings consist of an outer, an inner ring, a set of rolling elements, and a cage (i.e. retainer or separator). In most applications the inner ring with cage and rolling elements rotate whilst the bearing outer ring is stationary.

In the loaded area of bearing raceways, the so called “**load zone**” shear stresses develop due to the over rolling by the loaded rolling elements.

This continuous change between loaded and unloaded condition in the loaded zone causes a fatigue process to the ring material that leads to the development of micro cracks beneath the ring surface during the course of time.

This again may result in material particles fragmenting off the bearing ring raceways.

This natural mechanism, known as “**fatigue-life**”, has been researched extensively over several years and builds the base for the standardised calculation system of bearing life ratings.

When foreign particles or flaked-off particles of ring material enter the loaded zone of a rotating rolling bearing, some vibrations will occur.

In this way the change in vibration levels of a bearing arrangement may indicate the impending bearing failure.

Dismounting Bearings

The vast majority, about 90 per cent, of all rolling bearings are never removed from their locations, they stay in their machines or plants until the whole machine is scrapped.

This is why the replacement of bearings affects mainly large and larger rolling bearings, and bearings for important machinery where it is part of planned preventative maintenance programmes.

General

The ease of removal of rolling bearings is usually dependent on the dismounting possibilities considered and included in the machine design.

Particularly when dealing with machines or units that are known to require specific maintenance during their service life, including their frequent removal, quite simple and effective design features ease bearing removal significantly.

Such design measures may be pressure screws, dismounting threads and holes, or suitable slots or recesses on housings or shafts.

Preparations for Dismounting

The dismounting of bearings require some basic preparation, similar to when mounting rolling bearings, including careful study of manuals, machine plans and maintenance procedures which give appropriate information.

To ensure the successful replacement of any bearing all machine surfaces surrounding the area to be dismounted must be cleaned to eliminate the entrance of avoidable contamination, including production swarf and waste prior to any dismounting.

Also, all tools and auxiliary equipment to be used must be clean and in a good condition.

It is particularly important that when bearings are frequently dismounted and remounted special care should be taken at all times to avoid damage.

In principle, the dismounting of a bearing position is the opposite way to their mounting. This means bearings with loose fits should be dismounted first (fig. 10.30).

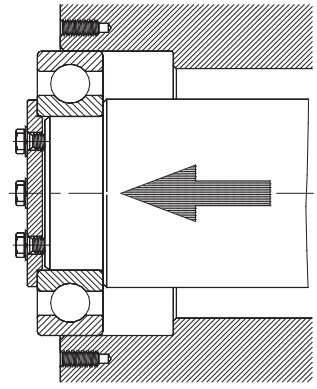

Fig. 10.30

The separable bearing types also present some advantages at removal (see fig. 10.31).

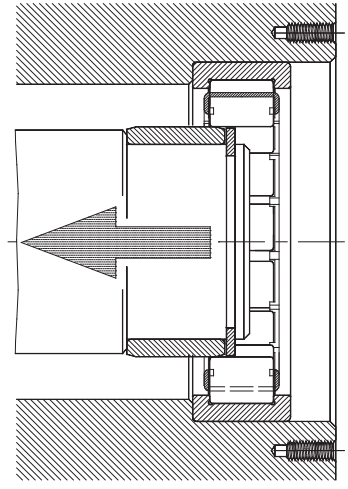

Fig. 10.31

Small size rolling bearings may be dismounted easily by mechanical means (fig. 10.32).

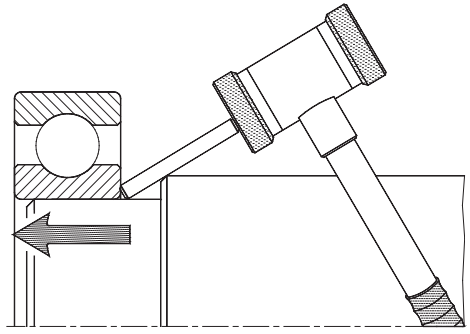

Fig. 10.32

Several special dismounting tools and systems are available to remove bearings additional to the commonly used and proven caw pullers. The claw tools, generally used for medium and large sized rolling bearings, consist of a spindle which acts either mechanically or hydraulically, in conjunction with various different sizes of claw legs and bridges which when assembled into 2 or 3 leg pullers meet the individual application requirements.

In the case of bearings located with interference fits a removal by means of **presses** may be of advantage, (fig. 10.33).

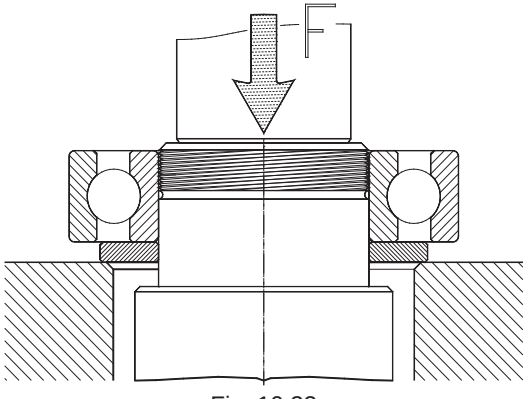

Fig. 10.33

It is restated that when bearings are planned for re-use, and removal is by the “press-method”, all transmission forces via the rolling elements must be strictly avoided.

The position of bearings that are mounted on shafts by means of adapter sleeves should be **marked** on the shaft to provide an easy refitting datum.

After marking the position, the fixing tongue of the locking device must to be bent up. The lock nut is loosened but not completely removed.

To dismount the bearing totally, it is driven from the adapter sleeve by hammer blows around its circumference (fig. 10.34).

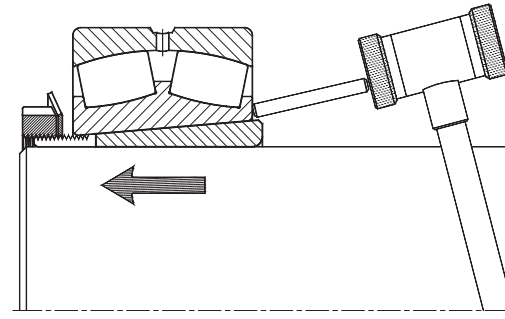

Fig. 10.34

If the bearing is located close to the end of a shaft, the loosening of the bearing may also be completed by applying impact bushings.

It is particularly important that when adapter sleeves are dismounted or mounted special care must be taken at all times to avoid damage.

The bearing can only be removed when it is loose on its seat and the locknut and lock washer is completely removed.

Following the bearing removal the adapter sleeve is easily removed.

In the case of bearings mounted on **withdrawal sleeves** the axial locking of the sleeve must be released first, only then can the removal of the bearing be completed.

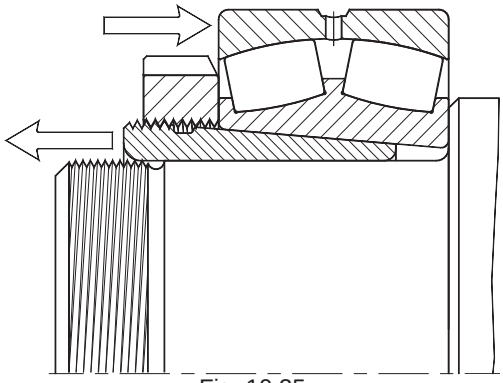

Fig. 10.35

The withdrawal sleeve is pulled from its seat using a satisfactory shaft nut, (fig. 10.35).

To minimise the friction between the bearing face and the nut side face the surfaces should be lightly lubricated using oil, bearing grease or a penetrating oil spray.

Dismounting Bearings using the Oil Injection Method

The dismounting of small and medium size rolling bearings is easily completed using simple mechanical tools and equipment.

When dismounting larger bearings, however, the forces required for their removal become large very quickly.

For such applications, the use of **hydraulic dismounting methods** has to be recommended. By applying hydraulic measures even very large and heavy bearings may be dismounted quickly, efficiently and effectively.

Furthermore dismounting bearings using hydraulic tools normally avoids the possibility of damaging either the bearing or adjacent parts, particularly, binding or jamming of heavy components.

Note:

> **Jammed bearings may suddenly become loose from their seats when removed using the injection oil method. This may lead in extreme cases to a literally jumping-off, even for very heavy bearings or parts.**

Please careful consider the safety instructions and the recommendations provided by the manufacturer of your hydraulic tools carefully ensure all parts for dismounting by the hydraulic oil method are secured against accidental dropping or coming off. This is avoidable and for health and safety reasons the associated locknut should only be slightly loose on its thread.

The locknut should only be removed when the bearing is completely free from its locating seat.

A simple and universal tool for both mounting and dismounting of rolling bearings is provided by **hydraulic nuts**, (fig. 10.18).

An example of how this device is engaged for dismounting a large spherical roller bearing seated on a withdrawal sleeve is shown in fig. 10.36.

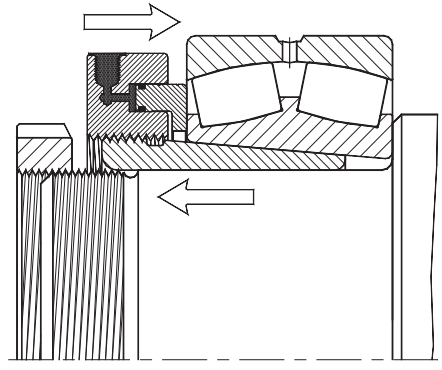

Fig. 10.36

To dismount the bearing, the same procedure as described at fig. 10.35 must be applied, but instead of the standard lock nut an appropriate **hydraulic nut** is engaged.

This is screwed onto the thread of the withdrawal sleeve as far as possible.

When the hydraulic nut is in its position, an additional axial stop (e.g. a shaft nut) is applied to prevent the bearing from coming off, the hydraulic nut is only oil pressure charged when the additional shaft nut is secure.

The withdrawal sleeve will be pulled out from its position by the axial movement of the nut piston.

The main advantage of hydraulic nuts lies in the fact, that they may also be applied to machines or bearing arrangements that are not normally supposed to being removed by hydraulic measures.

In the case of bearings that are mounted directly onto tapered shaft journals the required holes must be provided in the shaft end to allow the oil injection method to be applied (fig. 10.37).

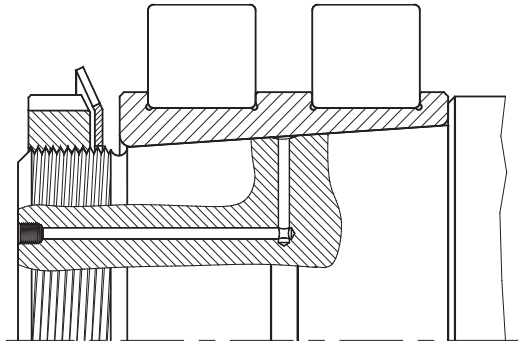

Fig. 10.37

To enable the oil pipe feed connection suitable and competent threads should be provided in the shaft end of the oil injection hole. This also allows the insertion of screw plugs to seal and prevent the entry of pollutants.

Some shallow oil grooves located around the circumference of the bearing seat allows easier distribution of the pressure oil.

To dismount such a bearing the fixing tongue of the locking device must be bend up. The lock nut is then loosened for some revolutions but for safety reasons is not completely removed.

The oil pipe may now be connected to the shaft hole and pressurised oil may be injected.

The bearings inner ring will expand, a little due to the applied pressure, enabling the build up of a very thin oil film between the bearing bore diameter and the shaft seat.

Due to the tapered bore the bearing will release from the shaft seat easily.

Larger adapter and withdrawal sleeves are often produced with oil holes and grooves to allow dismounting of the associated bearing by applying the oil injection method.

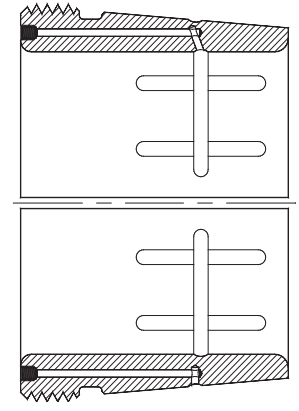

Fig. 10.38

Figure 10.38 shows a **withdrawal sleeve** of the series **AOH** . . which is produced with oil holes as standard. The connection holes and threads are located on the broad side face of the withdrawal sleeve.

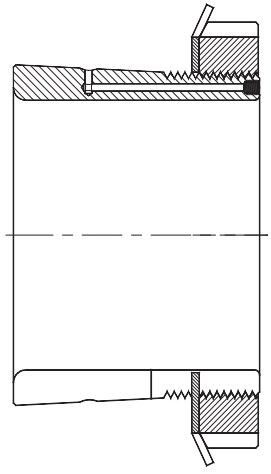

Fig. 10.39

Fig. 10.39 shows an **adapter sleeve** which is produced with oil holes as standard.

On adapter sleeves the connection of oil holes and threads is located on the narrow face side. (i.e. the lock nut is fixed).

Bearings by Heating

When removing bearings, the heating of either the bearing or the housing may ease the process somewhat.

Depending on the particularly case, heating the housings may be of advantage.

The mass removal of cylindrical roller bearing inner rings, as happens when overhauling railway axle box bearings, the appropriate tools are, **thermo rings**, see fig. 10.40

Thermo rings are slotted rings from solid aluminium with thermal insulated handles (fig. 10.40) .

The bore diameter of the ring is adjusted to the raceway diameter of the ring type that has to be removed.

Simple designed thermo rings do not have an integrated heat source and thus they need to be heated by means of hot plates or similar.

The required heating temperature and time is normally determined by practical experience.

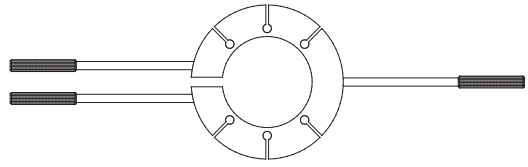

Fig. 10.40

A more advanced design of this simple but efficient tool are thermo rings that feature cast integral heating elements.

To remove bearing rings using thermo rings the ring surface has to be lightly oiled with a thin heat-resistant machine oil. The heated **thermo ring** must be placed around the bearing ring and clamped with the handles. The thin-walled bearing ring will quickly accept the heat of the thermo ring.

As soon as the ring expands due to the transferred heat it becomes loose and may be removed from its seat easily, even with heavy interference fits.

Normally it takes only a few seconds before ring removal from its seat is possible.

Because the simple thermo rings must to be reheated following each removal, the use of more than one thermo rings may become necessary.

Rillenkugellager
Deep Groove Ball Bearings

Einreihige Rillenkugellager
Single Row Deep Groove Ball Bearings

Einreihige Rillenkugellager mit Ringnut und Sprengring
Single Row Deep Groove Ball Bearings with Snap Ring Groove and Snap Ring

Einreihige Rillenkugellager

Single Row Deep Groove Ball Bearings

Normen, Hauptabmessungen

Ein- und zweireihige Rillenkugellager DIN 625

Standards, Boundary Dimensions

Single and double row deep groove ball bearings DIN 625

Allgemeines:

Einreihige Rillenkugellager sind starre, nicht zerlegbare Radiallager. Einreihige Rillenkugellager weisen die beste Drehzahleignung aller Lagerarten auf. Sie sind die mit Abstand am häufigsten verwendeten Wälzlager.

Rillenkugellager mit einem Außendurchmesser kleiner als 9,525 mm (3/8“) bzw. bis zu einem maximalen Außendurchmesser von 12,7 mm (½“) werden als „**Miniaturlager**“ bezeichnet, sofern deren Bohrungsdurchmesser größer ist als die Hälfte des Außendurchmessers.

General:

Single row deep groove ball bearings are rigid, non-separable radial bearings. **Single row deep groove ball bearings** are superior in speed rating to any other type of rolling element bearings. They are by far the most popular rolling bearing type.
Deep groove ball bearings are classified as follows:

- **Miniature ball bearings** - including 3.175 mm inner bore diameter.
- **Extra small ball bearings** - over 3.175 mm including 9.525 mm inner bore diameter.
- **Deep groove ball bearings** - over 9.525 mm inner bore diameter.

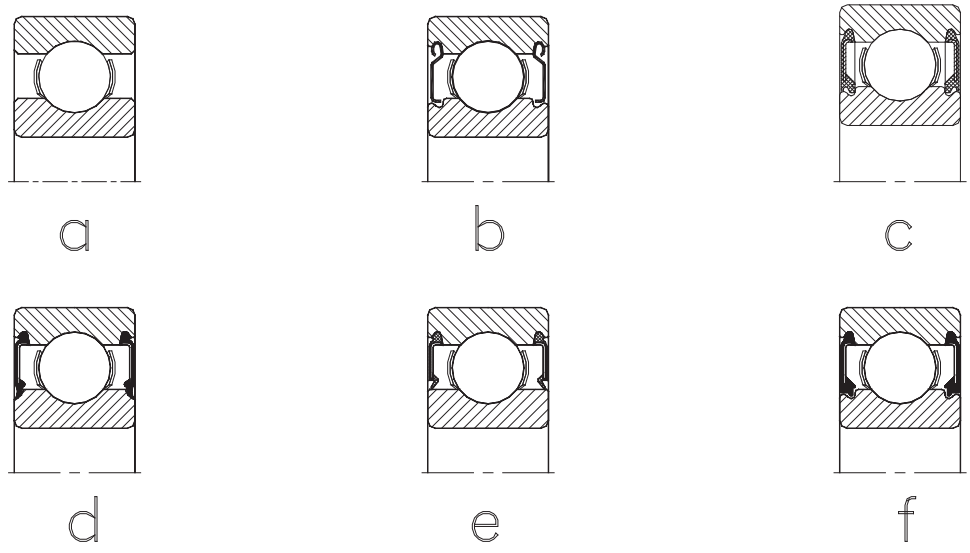

Abb. 1
Fig. 1

Bauformen

Einreihige Rillenkugellager sind standardmäßig in einer Vielzahl unterschiedlicher Grundausführungen verfügbar.

Lager mit Dicht- und Deckscheiben

Zum Standard-Lieferprogramm gehören unterschiedliche Varianten von einreihigen Rillenkugellagern mit integrierten Dicht- oder Deckscheiben.

NKE Wälzlager in beidseitig abgedichteter Ausführung (Nachsetzzeichen **-2RS2**, **-2RS**, **-2RSR** oder **-2LFS**) bzw. Lager mit beidseitigen Deckscheiben (Ausführung **-2Z**) werden bereits werksseitig mit einem hochwertigen Wälzlagerfett befüllt.

Die standardmäßig verwendete Füllmenge beträgt **25%** bis **50%** des jeweiligen Freiraums im Lager. Für spezielle Anwendungsbereiche können alle NKE Wälzlager bereits werksseitig mit anderen Schmierstoffen bzw. auch mit anderen Füllmengen versehen werden.

Deckscheiben

Die einseitig (Nachsetzzeichen **-Z**) oder beidseitig (Nachsetzzeichen **-2Z** s.h. Abb.1b) in den Lageraußenring eingepressten Stahlblech-Deckscheiben bilden eine einfache, berührungsfreie Spaltdichtung.

Im Betrieb kann sich durch den Dichtspalt ein Fettkragen am Innenring bilden.

Bei Anwendungen mit rotierendem Außenring ist bei höheren Drehzahlen ein Fettverlust möglich.

Design Variants

Single row deep groove ball bearings are available in a wide variety of different basic designs as standard.

Sealed and Shielded Bearings

Some variations of sealed and shielded single row deep groove ball bearings also belong to the standard product range.

NKE bearings incorporating two seals or shields (suffixes **-2RS2**, **-2RS**, **-2RSR**, **-2LFS** or **-2Z**) are supplied grease filled by the factory with approved high quality rolling bearing grease.

The standard applied grease fill is approximately **25%** to **50%** of the free space within the bearing.

For special operating conditions NKE bearings can also be supplied with special grease fillings according to customer's specification or with variable grease fill quantities than the standard.

Shields

Shields represent the most simple form of sealing. The shields are sheet metal shims press fitted into the outer ring groove profile on either one side (suffix **-Z**) or both sides (suffix **-2Z**), fig. 1b respectively. During operation a collar of grease may develop around the inner ring outside diameter providing some prevention against contaminate penetration, although grease loss is possible for applications where the outer ring rotates at high speed.

Die Betriebsdrehzahl von Lagern der **Ausführung -2Z**, die mit drehendem Außenring eingesetzt werden, darf 40% der entsprechenden Grenzdrehzahlen nicht überschreiten.

Dichtscheiben

Dichtscheiben bilden **berührende Dichtungen** zwischen Innen- und Außenring.

Je nach Lagergröße und Lagerbauart werden abgedichtete NKE-Rillenkugellager mit Dichtscheiben der Bauform **RS2** (Abb.1c) geliefert. Berührende NKE Dichtungen werden standardmäßig aus einem besonders verschleißfesten synthetischen Elastomer (Nitril-Butadien-Kautschuk, Kurzzeichen **NBR**) hergestellt und haben zur Versteifung Stahlscheiben einvulkanisiert. Diese Dichtungen sind für Einsatztemperaturen von **–30°C** bis **+120°C** geeignet.

Für Sonderanwendungen sind auch Dichtungen aus **NBR** anderen Werkstoffen lieferbar.

Weitere Informationen dazu finden Sie auf Seite 41 im Abschnitt „**Lagerdaten allgemein**“.

Drehzahleinschränkungen bei Lagern mit Dicht- oder Deckscheiben

Lager mit berührenden Dichtungen (Bauformen **-RS2**, **-2RS2**, **-RSR** und **-2RSR**) weisen durch die vorgespannten Dichtlippen eine zusätzliche Wärmeentwicklung auf, wodurch die maximal zulässigen Drehzahlen für diese Lager um ein Drittel unter den für Fettschmierung empfohlenen Grenzdrehzahlen offener Lager bzw. von Lagern mit Deckscheiben liegen:

$$n_{gRS} = \frac{n_{gFett} * 2}{3}$$

wobei

$\mathbf{n_{gRS}}$ = Grenzdrehzahl für das Lager in abgedichteter Ausführung [min^{-1}]

$\mathbf{n_{gFett}}$ = Grenzdrehzahl laut Produkttabelle für das Lager bei Fettschmierung [min^{-1}]

In the case of **-2Z-shielded** bearings that operate with their outer ring rotating, the maximum operating speed must not exceed 40% of the recommended limited speed ratings.

Seals

Seals form a rubbing contact seal between the bearings inner and outer ring.

Depending upon the bearing design, type and size they are produced with **RS2**-seals (fig. 1c). These contacting seals are produced using a wear resistant synthetic rubber (**N**itrile-**B**utadiene-**R**ubber, in short **NBR**) and are suitable for operating temperatures from **–30°C** to **+120 °C (-22°F** to **+248°F)**.

The seals have integrated steel washers to increase their rigidity.

For special applications, however, seals are also available in other materials.

For more detailed information see chapter “**General Bearing Data**” (page 226).

Speed Limitations of Sealed or Shielded Bearings

All **contacting seals** generate additional heat due to the rubbing of their preloaded sealing lips. This is why the maximum permissible speeds of bearings with contacting seals (suffix -**RS2**, **-2RS2**, -**RSR**, **-2RSR** etc.) is limited.

Their maximum speed must not exceed 2/3 of the limited speed ratings recommended for these bearings whether open or sealed design with grease lubrication:

$$n_{gRS} = \frac{n_{gGrease} * 2}{3}$$

where

$\mathbf{n_{gRS}}$ = Limited speed ratings for the bearing, sealed version [rpm]

$\mathbf{n_{gGrease}}$ = Limited speed ratings for the bearing with grease lubrication [rpm]

Berührungsfreie Dichtscheiben

Für Anwendungen bei höheren Drehzahlen, in denen Rillenkugellager in abgedichteter Ausführung benötigt werden, gibt es eine berührungsfreie Sonderdichtung, **LFS** (**L**ow **F**riction **S**eal), siehe Abb. 1f).

Bei der Bauart **LFS** liegen die Dichtlippen praktisch berührungsfrei am Innenring an. **LFS**-Dichtungen haben zwar eine erheblich bessere Dichtwirkung als Deckscheiben (Z-Deckel), sind aber berührenden Dichtungen der Bauformen -**RS**, **-2RS**, **-RSR**, **-2RSR**, **-RS2** und **-2RS2** hinsichtlich Dichtwirkung unterlegen.

LFS-Dichtungen erzeugen dafür aber auch keine Zusatzreibung. Sie erfordern daher im Gegensatz zu den berührenden Dichtungen keine Einschränkung der Grenzdrehzahlen.

Reibungsarme **LFS**-Dichtscheiben werden standardmäßig aus verschleißfestem synthetischen Kautschuk, Kurzzeichen **NBR gefertigt** und sind für Einsatztemperaturen von **-30°C** bis **+120°C** geeignet.

Bei allen **berührenden Dichtungen** kann es unter besonderen Betriebsbedingungen, wie beispielsweise sehr hohen Drehzahlen oder höheren Betriebstemperaturen zu einem gewissen Fettaustritt kommen. In Anwendungsfällen, in denen dies nicht zulässig ist, müssen zusätzliche Vorkehrungen getroffen werden.

Non-Contacting Seals

For high speed applications where sealed deep groove ball bearings are necessary, a special designed seal is available, the so-called **LFS**-seal (**LFS** stands for **L**ow **F**riction **S**eal), fig. 1f.

The sealing lips of **LFS**-seals contacts the bearing inner ring without preload and forms a non-contacting seal. In respect to their sealing effectiveness **LFS**-seals perform much better than Z-shields, but less than the contacting seals of the types **-RS**, **-2RS**, **-RSR**, **-2RSR**, **-RS2** and **-2RS2**.

On the other hand, **LFS-seals** do not generate additional heat. Thus bearings that are fitted with **LFS**-seals do not have a restriction in operating speed as do the other contacting seals.

LFS-type low friction seals are also from synthetic rubber (**NBR**) and thus suitable for operating in a temperature range of **-30°C** to **+ 120°C** (**-22°F** to **+248°F**).

For all **contacting seals** there is the possibility of an emergence of grease during certain operating conditions such as bearings running at high speeds or high operating temperatures. In applications where this is not permissible, adequate additional design measures must be considered.

Schiefstellung

Einreihige Rillenkugellager sind zum Ausgleich von Schiefstellungen nur beschränkt geeignet. Unter normalen Betriebsverhältnissen sind – abhängig von der Radialluft – Schiefstellungen bis maximal 10 Winkelminuten aus der Mittellage zulässig.

Allerdings weisen Lager, die unter Schiefstellungen laufen, erheblich höhere Laufgeräusche auf. Weiters ist in diesen Fällen auch mit einer Verringerung der Gebrauchsdauer durch die Zusatzbelastungen zu rechnen.

Misalignment

Single row deep groove ball bearings have a very limited ability to accommodate misalignments. Under normal application conditions, misalignments may not exceed 10 angular minutes maximum from their centre position.

It must be considered, however, that bearings which run misaligned are subjected to considerable additional forces that will shorten their service life and generate high running noise.

Toleranzen

Einreihige NKE Rillenkugellager werden standardmäßig in Normaltoleranz (**PN**) gefertigt. Auf Anfrage können diese aber auch mit eingeengten Toleranzen, wie beispielsweise in den Toleranzklassen **P6** und **P5** usw. gefertigt werden.

Detaillierte Werte der einzelnen Toleranzklassen entnehmen Sie bitte den Tabellen im Abschnitt „**Lagerdaten / Toleranzen**“, ab Seite **52**.

Tolerances

NKE single row deep grooved ball bearings are produced to normal tolerance class (**PN**) as standard. Applications of higher dimensional and geometrical accuracy the bearings are produced to precision tolerance classes **P6** and **P5**.

Detailed values for the tolerance classes are listed in the chapter “**Bearing Data / Tolerances**”, page **237**.

Käfige

Sofern nicht anders spezifiziert, werden **NKE** Rillenkugellager der Normalausführung mit Stahlblechkäfigen gefertigt. Ausgenommen davon sind große Lager, die mit Messingmassivkäfigen erzeugt werden (Nachsetzzeichen **M**), und kleine Lager, die teilweise standardmäßig einen Messingblechkäfig aufweisen (Nachsetzzeichen **Y**).

Auf Wunsch können **NKE** Rillenkugellager auch mit anderen Käfigen geliefert werden.

Cages

NKE deep groove ball bearings are normally fitted with pressed steel cages as standard.

Exceptions to this are large bearings, that usually have machined solid brass cages (suffix **M**) as standard or small and miniature bearings that are frequently equipped with pressed brass cages, indicated by the suffix “ **Y** ”.

NKE deep groove ball bearings are also produced to other cage designs and cage materials.

Lagerluft

Einreihige NKE Rillenkugellager werden standardmäßig mit der Lagerluft „NORMAL“ (**CN**) gefertigt.

Die als Normalluft definierten Werte wurden so bemessen, daß die Lager bei Verwendung „normaler“ Passungen sowie unter „normalen“ Betriebsbedingungen eine ausreichende Betriebslagerluft erhalten.

Als „**normale**“ Passungen bei Kugellagern gelten:

Wellensitze: **h5, j5, k5**
Gehäusesitze: **H6, H7, J6, J7**

Auf Anfrage können alle NKE Rillenkugellager auch mit anderen Lagerluftwerten gefertigt werden.

Werte für die unterschiedlichen **Lagerluftgruppen** von **ein und zweireihigen NKE Rillenkugellagern** sind in den untenstehenden Tabellen angegeben.

Diese Werte entsprechen, soweit diese genormt sind, den Vorgaben der DIN 620/Teil 4 bzw. ISO 5753-1991.

Internal Clearance

NKE single row deep groove ball bearings are produced with **normal internal clearance** (**CN**) as standard.

The values of standard internal clearance are defined in such a way that bearings with **CN** clearance will have sufficient residual operating clearance when mounted using “normal” bearing fits.

“**Normal**” fits for deep groove ball bearings are considered as:

Shaft fits: **h5, j5, k5**
Housing fits: **H6, H7, J6, J7**

NKE deep groove ball bearings are also produced to other internal clearances.

Values of the different **internal clearance groups** of **single and double row NKE deep groove ball bearings** are listed in the tables below. These values are standardised and conform to the valid international standards DIN 620 part 4 and ISO 5753-1991.

Lagerluft ein- und zweireihiger **NKE** Rillenkugellager, Bohrungsdurchmesser ≤ 250 mm.
***Internal clearance groups** of **NKE** single and double row deep groove ball bearings, bore diameters up to 250 mm.*

Lagerbohrung *Bore diameter*	**[mm]**	**>** **≤**	**2,5** **6**	**6** **10**	**10** **18**	**18** **24**	**24** **30**	**30** **40**	**40** **50**	**50** **65**	**65** **80**	**80** **100**	**100** **120**	**120** **140**	**140** **160**	**160** **180**	**180** **200**	**200** **225**	**225** **250**
Luftgruppe *Clearance group*	**C2**	min	0	0	0	0	1	1	1	1	1	1	2	2	2	2	2	4	2
		max	7	7	9	10	11	11	11	15	15	18	20	23	23	25	30	32	36
Luftgruppe ***Clearance group** (NORMAL)*	**CN**	min	2	2	3	5	5	6	6	8	10	12	15	18	18	20	25	28	31
		max	13	13	18	20	20	20	23	28	30	36	41	48	53	61	71	82	92
Luftgruppe *Clearance group*	**C3**	min	8	8	11	13	13	15	18	23	25	30	36	41	46	53	63	73	87
		max	23	23	25	28	28	33	36	43	51	58	66	81	91	102	117	132	152
Luftgruppe *Clearance group*	**C4**	min	--	14	18	20	23	28	30	38	46	53	61	71	81	91	107	120	140
		max	--	29	33	36	41	46	51	61	71	84	97	114	130	147	163	187	217
Luftgruppe *Clearance group*	**C5**	min	--	20	25	28	30	40	45	55	65	75	90	105	120	135	150	175	205
		max	--	37	45	48	53	64	73	90	105	120	140	160	180	200	230	255	290

Lagerluft ein- und zweireihiger **NKE** Rillenkugellager, Bohrungsdurchmesser > 250 mm.
***Internal clearance groups** of **NKE** single and double row deep groove ball bearings, bore diameters over 250 mm.*

Lagerbohrung *Bore diameter*	**[mm]**	**>** **≤**	**250** **280**	**280** **315**	**315** **355**	**355** **400**	**400** **450**	**450** **500**	**500** **560**	**560** **630**	**630** **710**	**710** **800**	**800** **900**	**900** **1000**	**1000** **1120**	**1120** **1250**
Luftgruppe *Clearance group*	**C2**	min	4	8	8	8	10	10	20	20	30	30	30	40	40	40
		max	39	45	50	60	70	80	90	100	120	130	150	160	170	180
Luftgruppe *Clearance group (NORMAL)*	**CN**	min	36	42	50	60	70	80	90	100	120	130	150	160	170	180
		max	97	110	120	140	160	180	200	220	250	280	310	340	370	400
Luftgruppe *Clearance group*	**C3**	min	97	110	120	140	160	180	200	220	250	280	310	340	370	400
		max	162	180	200	230	260	290	320	350	390	440	490	540	590	640
Luftgruppe *Clearance group*	**C4**	min	152	175	200	230	260	290	320	350	390	440	490	540	590	640
		max	237	260	290	330	370	410	460	510	560	620	690	760	840	910
Luftgruppe *Clearance group*	**C5**	min	225	260	290	330	370	410	460	510	560	620	690	760	840	910
		max	320	360	405	460	520	570	630	700	780	860	960	1040	1120	1220

Mindestbelastung

Zum kinematisch korrekten Betrieb benötigen Wälzlager in allen Betriebszuständen eine Mindestbelastung.

Für NKE einreihige Rillenkugellager muss die Mindestbelastung 1% der dynamischen Tragzahl betragen.

Berechnungsfaktoren

Bei Rillenkugellagern hängen sowohl die **axiale Belastbarkeit** als auch die zur Berechnung der **äquivalenten dynamischen Lagerbelastung** erforderlichen **X**- und **Y**- Faktoren direkt von der **Lagerluft** ab, da sich mit zunehmender Lagerluft auch der Druckwinkel vergrößert.

Äquivalente dynamische Lagerbelastung

Für ein- und zweireihige NKE Rillenkugellager gilt bei:

$$\frac{F_a}{F_r} \leq e \qquad \mathbf{P = F_r}$$

bzw. bei

$$\frac{F_a}{F_r} > e \qquad \mathbf{P = X * F_r + Y * F_a}$$

Die Berechnungsfaktoren X und Y werden maßgeblich durch das Verhältnis von wirkender Axialkraft zur statischen Tragzahl $\mathbf{C_{0r}}$ des Lagers bestimmt.

Werte für das **Grenzlastverhältnis e** sowie die **X**- und **Y-Faktoren** in Abhängigkeit von der jeweiligen Lagerluft sind in nebenstehender Tabelle angegeben. Zwischenwerte sind durch Interpolation zu ermitteln.

Minimum Load

Bearings require a minimum load under all operating conditions to ensure kinematically correct rolling element function.

For NKE single row deep groove ball bearings the minimum load must be 1% of the dynamic load rating.

Calculation Factors

In the case of deep groove ball bearings both the axial load capacity and the **X** and **Y** factors are required for the calculation of the actual dynamic equivalent load, which depends directly on the internal clearance of the bearing, because the contact angle increases along with the internal bearing clearance.

Equivalent Dynamic Bearing Load

For single and double row ball bearings the following formula should be applied:

Where

$$\frac{F_a}{F_r} \leq e, \text{ then } \quad \mathbf{P = F_r}$$

or, where

$$\frac{F_a}{F_r} > e, \text{ then } \quad \mathbf{P = X * F_r + Y * F_a}$$

The magnitude of calculation factors **X** and **Y** are mainly determined by the ratio of acting thrust force to static load rating $\mathbf{C_{0r}}$ of the affected bearing.

Values of the **limit value e** and the **X** and **Y factors** are given in the following table, based on the individual bearing internal clearance.

Äquivalente statische Lagerbelastung

Für ein- und zweireihige Rillenkugellager gilt:

$$P_0 = 0{,}6 * F_r + 0{,}5 * F_a$$

Wenn allerdings P_0 kleiner als F_r wird, ist der höhere Wert zur Berechnung der äquivalenten statischen Lagerbelastung zu verwenden.

Equivalent Static Bearing Load

For single and double row ball bearings:

$$P_0 = 0{,}6 * F_r + 0{,}5 * F_a$$

When P_0 is smaller than F_r, the higher value must be used for the calculation of the equivalent static bearing load.

Luftabhängige Berechnungsfaktoren ein- und zweireihiger **NKE** Rillenkugellager
*Calculation factors of **NKE** single and double row deep groove ball bearings, based on individual clearances*

F_a / C_{0r}	Lagerluftgruppe *Internal clearance group*								
	CN (NORMAL)			C3			C4		
	e	X	Y	e	X	Y	e	X	Y
0,030	**0,23**	0,56	1,95	**0,32**	0,46	1,72	**0,41**	0,44	1,41
0,035	**0,23**	0,56	1,90	**0,32**	0,46	1,69	**0,41**	0,44	1,39
0,040	**0,24**	0,56	1,80	**0,33**	0,46	1,62	**0,42**	0,44	1,36
0,045	**0,24**	0,56	1,77	**0,33**	0,46	1,60	**0,42**	0,44	1,35
0,050	**0,25**	0,56	1,74	**0,34**	0,46	1,57	**0,43**	0,44	1,33
0,055	**0,25**	0,56	1,71	**0,34**	0,46	1,55	**0,43**	0,44	1,32
0,060	**0,26**	0,56	1,69	**0,35**	0,46	1,53	**0,43**	0,44	1,31
0,065	**0,26**	0,56	1,66	**0,35**	0,46	1,51	**0,43**	0,44	1,30
0,070	**0,27**	0,56	1,60	**0,36**	0,46	1,46	**0,44**	0,44	1,27
0,080	**0,28**	0,56	1,57	**0,37**	0,46	1,44	**0,45**	0,44	1,25
0,090	**0,28**	0,56	1,54	**0,38**	0,46	1,41	**0,45**	0,44	1,24
0,10	**0,29**	0,56	1,51	**0,38**	0,46	1,39	**0,46**	0,44	1,22
0,11	**0,29**	0,56	1,48	**0,39**	0,46	1,36	**0,46**	0,44	1,20
0,12	**0,30**	0,56	1,45	**0,40**	0,46	1,34	**0,47**	0,44	1,19
0,13	**0,31**	0,56	1,40	**0,41**	0,46	1,30	**0,48**	0,44	1,16
0,14	**0,31**	0,56	1,38	**0,41**	0,46	1,29	**0,48**	0,44	1,15
0,15	**0,32**	0,56	1,37	**0,42**	0,46	1,27	**0,49**	0,44	1,14
0,16	**0,32**	0,56	1,35	**0,42**	0,46	1,26	**0,49**	0,44	1,12
0,17	**0,33**	0,56	1,34	**0,43**	0,46	1,25	**0,50**	0,44	1,12
0,18	**0,33**	0,56	1,32	**0,43**	0,46	1,24	**0,50**	0,44	1,12
0,19	**0,34**	0,56	1,30	**0,43**	0,46	1,22	**0,50**	0,44	1,11
0,20	**0,34**	0,56	1,29	**0,44**	0,46	1,21	**0,51**	0,44	1,10
0,25	**0,37**	0,56	1,20	**0,46**	0,46	1,14	**0,53**	0,44	1,05
0,30	**0,38**	0,56	1,16	**0,48**	0,46	1,11	**0,54**	0,44	1,04
0,35	**0,40**	0,56	1,12	**0,49**	0,46	1,09	**0,54**	0,44	1,03
0,40	**0,41**	0,56	1,08	**0,51**	0,46	1,06	**0,55**	0,44	1,02
0,45	**0,42**	0,56	1,04	**0,52**	0,46	1,03	**0,55**	0,44	1,01
0,50	**0,44**	0,56	1,00	**0,54**	0,46	1,00	**0,56**	0,44	1,00

Maximale axiale Belastbarkeit

Bei reiner Axialbelastung sollte die auf das Lager wirkende Kraft eine bestimmte, von der Innengeometrie der jeweiligen Lager abhängende Größe folgende Werte nicht überschreiten.

Als **Faustregel** gilt:
Bei kleinen Rillenkugellagern sowie bei Dünnringlagern und Lagern der Reihen **617, 618, 619, 160, 161** gilt:

$$F_{amax} \leq \frac{C_{0r}}{4}$$

Für andere Kugellagertypen gilt:

$$F_{amax} \leq \frac{C_{0r}}{2}$$

Maximum Thrust Loads

In the case of purely axial loaded bearings the acting thrust forces must not exceed certain limits. The limits are determined by the internal bearing design.

For guidance the following formula may be applied:
For **miniature** deep groove ball bearings, **thin section** bearings and bearings of the series **617, 618, 619, 160 and 161:**
where:

$$F_{amax} \leq \frac{C_{0r}}{4}$$

For all other deep groove ball bearings the following applies:

$$F_{amax} \leq \frac{C_{0r}}{2}$$

Weitere Varianten einreihiger Rillenkugellager

Rillenkugellager werden in einer Vielzahl unterschiedlicher Varianten hergestellt, von denen wiederum eine Anzahl zum NKE-Standard-Lieferprogramm gehört, das in diesem Katalog eingehend beschrieben wird.

Überbreite Reihen 622...2RS und 623...2RS

Dauergeschmierte Lagerungen, beispielsweise Arbeitsspindeln von Holzbearbeitungsmaschinen, erfordern abgedichtete Rillenkugellager mit vergrößerter Schmierstoffmenge.

Rillenkugellager der **überbreiten Reihen 622..-2RS2** und **623..-2RS2** weisen bei gleichem Bohrungs - und Außendurchmesser eine größere Breite und daher größere Fettreservoire als vergleichbare Lager der Baureihen **62..-2RS2** bzw. **63..-2RS2** auf.

Detaillierte Werte sind in den Produkttabellen der einreihigen Rillenkugellager enthalten.

Further Design Variants of Single Row Deep Groove Ball Bearings

NKE deep groove ball bearings are produced in a wide range of different variants. Many of them are part of the NKE standard product range as listed in this technical and product catalogue.

Extra Width Series 622...2RS and 623...2RS

Several applications require sealed deep groove ball bearings with extra grease volume to ensure maximum service life. Examples are greased "**for-life**" bearing arrangements in wood working machines.

These requirements are fulfilled by extra-width bearings of the series **622..-2RS2** and **623..-2RS2**. These have the same radial cross-section section as bearings of series **62..-2RS2** or **63..-2RS2**, respectively, but feature an enlarged width.

This enables a larger grease fill volume. For detailed information please see the Product Tables.

Anschlussmaße ein- und Zweireihiger Rillenkugellager

Die Umgebungsteile der Lager müssen so gestaltet sein, dass eine ausreichende axiale Unterstützung der Lagerringe gewährleistet ist. Dazu müssen die Schulterhöhen der Anlageflächen an den Wellenbunden bzw. der Gehäuseschultern eine ausreichende Mindesthöhe aufweisen.

Allerdings dürfen die Radien der Kantenverrundung der Lagerringe nicht an den Hohlkehlen von Wellenbund oder Gehäuse anliegen.

Daher muss der größte Hohlkehlradius an den Anschlußteilen ($\mathbf{r_g}$) kleiner sein als der kleinste Radius für die Kantenverrundung ($\mathbf{r_s}$) der Lagerringe (siehe Zeichnung bei Tabelle auf der Folgeseite).

Empfehlungen für Einbaumaße sind auch in **DIN 5418** definiert.

Abutment and Fillet Dimensions for Single and Double Row Deep Groove Ball Bearings

The machine components surrounding the bearing must be designed in such a way that adequate axial support of bearing rings is secured under all circumstances.

To gain an adequate support both the shaft shoulders and the housing shoulders must have a certain minimum height.

On the other hand, the bearing rings must contact adjacent parts with their side faces only. The radii of bearing fillets must not touch the shoulder fillet radii of neither the shaft shoulders or the housing.

Therefore, the largest fillet radius ($\mathbf{r_g}$) must be smaller than the minimum fillet dimension of the bearing rings ($\mathbf{r_s}$) as listed in the bearing tables. For details please see the table on following page.

Recommendations for the dimensions of adjacent parts are given in **DIN 5418**.

NKE Rillenkugellager mit Sonderbefettung

Für spezielle Anwendungsbereiche können aber alle **NKE Wälzlager** auch mit Sonderfetten nach Kundenspezifikationen bzw. mit anderen Schmierstoffmengen geliefert werden.

NKE Deep Groove Ball Bearings with Special Grease Filling

For special operating conditions **NKE** bearings can also be supplied with special grease fillings according to customer's specification or with grease fill volumes other than the standard.

Anschlussmaße ein- und zweireihiger Rillenkugellager [mm]
Abutment and Fillet Dimensions for Single and Double Row Deep Groove Ball Bearings [mm]

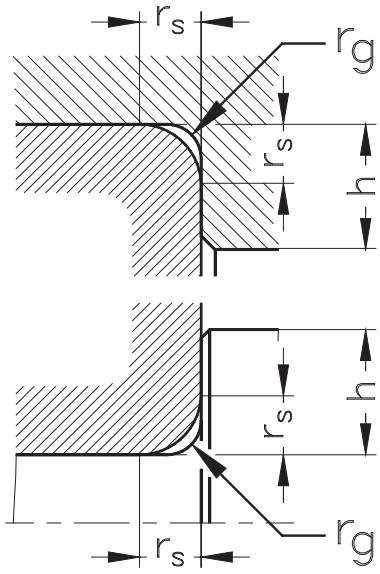

$r_{s\,min}$	$r_{g\,max}$	h_{min} Lagerreihen *Bearing series*		
		618, 619 160, 60	62, 622 63, 623	64
0,08	**0,08**	0,26		
0,1	**0,1**	0,3	0,6	--
0,15	**0,15**	0,4	0,7	--
0,2	**0,2**	0,7	0,9	--
0,3	**0,3**	1	1,2	--
0,6	**0,6**	1,6	2,1	--
1	**1**	2,3	2,8	--
1,1	**1**	3	3,5	4,5
1,5	**1,5**	3,5	4,5	5,5
2	**2**	4,4	5,5	6,5
2,1	**2,1**	5,1	6	7
3	**2,5**	6,2	7	8
4	**3**	7,3	8,5	10
5	**4**	9	10	12
6	**5**	11,5	13	15
7,5	**6**	14	16	19

Das **NKE Bezeichnungsschema** für Wälzlager mit Sonderbefettung setzt sich aus folgenden Symbolen zusammen:

The **NKE designation system** for bearings containing special grease consists of the following symbols:

A	XX	B

A) **Symbol für die Temperatureignung:**
LT Tieftemperaturfett
MT Mitteltemperaturfett
HT Hochtemperaturfett
LHT Sonderfett, geeignet für Hoch- und Tieftemperaturanwendungen

XX) **Fortlaufende Numerierung**

B) **Symbol für Fettfüllmenge in Prozent des Lagerfreiraumes**

A Fettfüllung 10% bis 15%
-- Fettfüllung 25% bis 50% (**Standard**)
M Fettfüllung 45% bis 60%
X Fettfüllung 70% bis 90% (Vollfettfüllung)
C Fettfüllungsgrad nach Kundenspezifikation

A) **Symbol for temperature range of grease:**
LT **L**ow **T**emperature grease
MT **M**edium **T**emperature grease
HT **H**igh **T**emperature grease
LHT Special grease suitable for **L**ow *and* **H**igh **T**emperatures

XX) **Continual number**

B) **Symbol for grease filling volume as % of bearings free space**

A Filling volume 10% ÷ 15%
-- Filling volume 25% up to 50% (**Standard**)
M Filling volume 45% up to 60%
X Filling volume 70% up to 90% (bearing is fully filled with grease)
C Filling volume according to individual customers' specifications

Montage abgedichteter Lager

Die beidseitig abgedichteten bzw. mit Deckscheiben an beiden Seiten gelieferten **NKE Rillenkugellager** (Nachsetzzeichen **-2RS**, **-2RSR**, **-2LFS** oder **-2Z**) die bereits gefettet geliefert werden, dürfen vor dem Einbau nicht ausgewaschen oder im Ölbad erwärmt werden.

Diese Lager sollten vorzugsweise in kaltem Zustand montiert werden.

Beim Einbau ist besonders darauf zu achten, dass die Dicht- oder Deckscheiben nicht beschädigt werden.

Fitting of Sealed Bearings

NKE single row deep groove ball bearings that are fitted with seals or shields on both sides (suffixes **-2RS**, **-2RSR**, **-2LFS** or **-2Z**) are supplied already grease packed. Therefore they must not be washed out or heated up by oil bath method prior to mounting.

These bearings should preferably be mounted in normal temperature conditions.

It is important that the seals or shields must not be damaged during mounting.

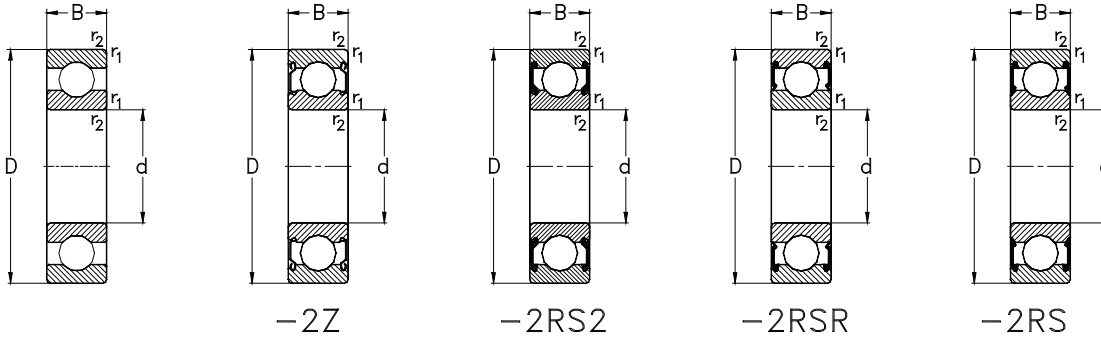

Hauptabmessungen [mm] *Boundary dimensions [mm]*				Lagertype *Designation*	Tragzahlen [kN] *Load ratings [kN]*			Referenzdrehzahlen [min^{-1}] *Thermal speed ratings [rpm]*	Grenzdrehzahlen [min^{-1}] *Limited speed ratings [rpm]*	Gewicht [kg] *Weight [kg]*
d	**D**	**B**	**r_1, r_2** min		**C_r** dyn.	**C_{0r}** stat.	**C_u**	**$n_{\theta r}$**	**n_G**	**m**
3	10	4	0,15	**623**	0,6	0,3	--	56400	80000	0,001
	10	4	0,15	**623-Z**	0,6	0,3	--	--	52000	0,001
	10	4	0,15	**623-2Z**	0,6	0,3	--	--	52000	0,001
4	11	4	0,15	**619/4**	0,9	0,3	--	52800	80000	0,001
	12	4	0,2	**604**	0,8	0,3	--	49000	75000	0,002
	13	5	0,2	**624**	1,2	0,5	--	46600	67000	0,003
	13	5	0,2	**624-Z**	1,2	0,5	--	--	38000	0,003
	13	5	0,2	**624-2Z**	1,2	0,5	--	--	38000	0,003
	16	5	0,3	**634**	1,4	0,6	--	35300	67000	0,006
	16	5	0,3	**634-Z**	1,4	0,6	--	--	36000	0,006
	16	5	0,3	**634-2Z**	1,4	0,6	--	--	36000	0,006
5	13	4	0,2	**619/5**	1,1	0,4	--	42300	67000	0,002
	16	5	0,3	**625**	1,4	0,6	--	36200	60000	0,005
	16	5	0,3	**625-Z**	1,4	0,6	--	--	36000	0,005
	16	5	0,3	**625-2Z**	1,4	0,6	--	--	36000	0,005
	19	6	0,3	**635**	2,2	1	--	31500	50000	0,009
	19	6	0,3	**635-Z**	2,2	1	--	--	32000	0,009
	19	6	0,3	**635-2Z**	2,2	1	--	--	32000	0,009
6	15	5	0,2	**619/6**	1,3	0,5	--	40100	63000	0,004
	19	6	0,3	**626**	2,2	1	--	32500	50000	0,009
	19	6	0,3	**626-2RSR**	2,2	1	--	--	21500	0,009
	19	6	0,3	**626-RSR**	2,2	1	--	--	21500	0,009

Anschlussmaße siehe Seite 383

Abutment and fillet dimensions see on page 383

Hauptabmessungen [mm] *Boundary dimensions [mm]*				Lagertype *Designation*	Tragzahlen [kN] *Load ratings [kN]*			Referenzdrehzahlen [min^{-1}] *Thermal speed ratings [rpm]*	Grenzdrehzahlen [min^{-1}] *Limited speed ratings [rpm]*	Gewicht [kg] *Weight [kg]*
d	**D**	**B**	**r_1, r_2** min		**C_r** dyn.	**C_{0r}** stat.	**C_u**	**$n_{\theta r}$**	**n_G**	**m**
6	19	6	0,3	**626-Z**	2,2	1	--	--	32000	0,009
	19	6	0,3	**626-2Z**	2,2	1	--	--	32000	0,009
7	17	5	0,3	**619/7**	1,6	0,7	--	34200	56000	0,005
	19	6	0,3	**607**	2,1	0,9	--	34600	53000	0,008
	19	6	0,3	**607-RSR**	2,1	0,9	--	--	20000	0,008
	19	6	0,3	**607-2RSR**	2,1	0,9	--	--	20000	0,008
	19	6	0,3	**607-Z**	2,1	0,9	--	--	30000	0,008
	19	6	0,3	**607-2Z**	2,1	0,9	--	--	30000	0,008
	22	7	0,3	**627**	3,3	1,3	0,1	29900	45000	0,013
	22	7	0,3	**627-RSR**	3,3	1,3	0,1	--	20000	0,013
	22	7	0,3	**627-2RSR**	3,3	1,3	0,1	--	20000	0,013
	22	7	0,3	**627-Z**	3,3	1,3	0,1	--	30000	0,013
	22	7	0,3	**627-2Z**	3,3	1,3	0,1	--	30000	0,013
8	19	6	0,3	**619/8**	2,2	0,9	0	33100	50000	0,007
	22	7	0,3	**608**	3,3	1,4	0,1	31800	48000	0,013
	22	7	0,3	**608-RSR**	3,3	1,4	0,1	--	20000	0,013
	22	7	0,3	**608-2RSR**	3,3	1,4	0,1	--	20000	0,013
	22	7	0,3	**608-Z**	3,3	1,4	0,1	--	30000	0,013
	22	7	0,3	**608-2Z**	3,3	1,4	0,1	--	30000	0,013
9	20	6	0,3	**619/9**	1,8	0,9	0,1	30300	48000	0,008
	24	7	0,3	**609**	3,7	1,7	0,1	28300	43000	0,015
	24	7	0,3	**609-RSR**	3,7	1,7	0,1	--	18000	0,015

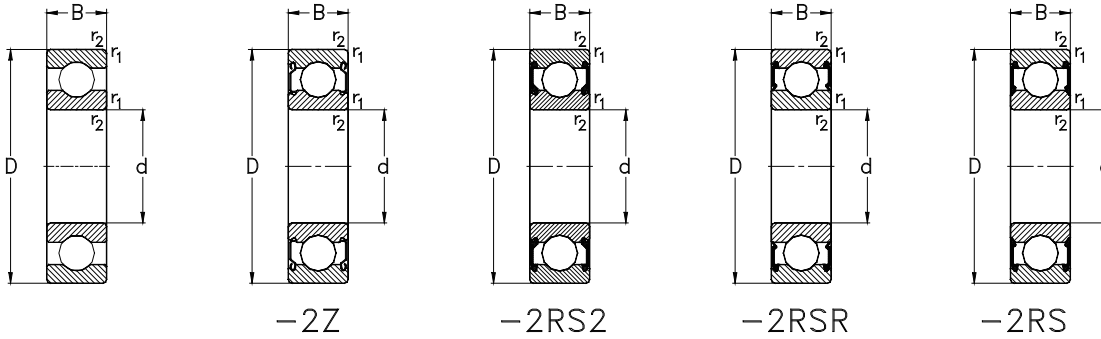

Hauptabmessungen [mm] *Boundary dimensions [mm]*				Lagertype *Designation*	Tragzahlen [kN] *Load ratings [kN]*			Referenzdrehzahlen [min^{-1}] *Thermal speed ratings [rpm]*	Grenzdrehzahlen [min^{-1}] *Limited speed ratings [rpm]*	Gewicht [kg] *Weight [kg]*
d	**D**	**B**	**r_1, r_2** min		**C_r** dyn.	**C_{0r}** stat.	**C_u**	**$n_{\theta r}$**	**n_G**	**m**
9	24	7	0,3	**609-2RSR**	3,7	1,7	0,1	--	18000	0,015
	24	7	0,3	**609-Z**	3,7	1,7	0,1	--	30000	0,015
	24	7	0,3	**609-2Z**	3,7	1,7	0,1	--	30000	0,015
	26	8	0,6	**629**	4,6	1,9	0,1	25700	38000	0,02
	26	8	0,6	**629-RSR**	4,6	1,9	0,1	--	18500	0,02
	26	8	0,6	**629-2RSR**	4,6	1,9	0,1	--	18500	0,02
	26	8	0,6	**629-Z**	4,6	1,9	0,1	--	28000	0,02
	26	8	0,6	**629-2Z**	4,6	1,9	0,1	--	28000	0,02
10	19	5	0,3	**61800**	1,7	0,8	0	27500	48000	0,005
	19	5	0,3	**61800-2RSR**	1,7	0,8	0	--	22000	0,005
	19	5	0,3	**61800-2Z**	1,7	0,8	0	--	34000	0,005
	22	6	0,3	**61900**	2,7	1,3	0,1	26900	45000	0,01
	22	6	0,3	**61900-2RSR**	2,7	1,3	0,1	--	22000	0,01
	22	6	0,3	**61900-2Z**	2,7	1,3	0,1	--	34000	0,01
	26	8	0,3	**6000**	4,6	2	0,1	27600	40000	0,019
	26	8	0,3	**6000-RS2**	4,6	2	0,1	--	17000	0,019
	26	8	0,3	**6000-2RS2**	4,6	2	0,1	--	17000	0,019
	26	8	0,3	**6000-Z**	4,6	2	0,1	--	28000	0,019
	26	8	0,3	**6000-2Z**	4,6	2	0,1	--	28000	0,019
	30	9	0,6	**6200**	5,1	2,4	0,1	23500	40000	0,03
	30	9	0,6	**6200-RS2**	5,1	2,4	0,1	--	17000	0,03
	30	9	0,6	**6200-2RS2**	5,1	2,4	0,1	--	17000	0,03

Anschlussmaße siehe Seite 383

Abutment and fillet dimensions see on page 383

Hauptabmessungen [mm] *Boundary dimensions [mm]*				Lagertype *Designation*	Tragzahlen [kN] *Load ratings [kN]*			Referenzdrehzahlen [min^{-1}] *Thermal speed ratings [rpm]*	Grenzdrehzahlen [min^{-1}] *Limited speed ratings [rpm]*	Gewicht [kg] *Weight [kg]*
d	**D**	**B**	**r_1, r_2** min		**C_r** dyn.	**C_{0r}** stat.	**C_u**	**$n_{\theta r}$**	**n_G**	**m**
10	30	9	0,6	**6200-Z**	5,1	2,4	0,1	--	26000	0,03
	30	9	0,6	**6200-2Z**	5,1	2,4	0,1	--	26000	0,03
	35	11	0,6	**6300**	8,2	3,5	0,2	21100	32000	0,055
	35	11	0,6	**6300-RS2**	8,2	3,5	0,2	--	14500	0,055
	35	11	0,6	**6300-2RS2**	8,2	3,5	0,2	--	14500	0,055
	35	11	0,6	**6300-Z**	8,2	3,5	0,2	--	22000	0,055
	35	11	0,6	**6300-2Z**	8,2	3,5	0,2	--	22000	0,055
12	21	5	0,3	**61801**	1,8	1	0	23500	43000	0,006
	21	5	0,3	**61801-2RSR**	1,8	1	0	--	21000	0,006
	21	5	0,3	**61801-2Z**	1,8	1	0	--	32000	0,006
	24	6	0,3	**61901**	2,2	1,5	0,1	23300	40000	0,011
	24	6	0,3	**61901-2RSR**	2,2	1,5	0,1	--	20000	0,011
	24	6	0,3	**61901-2Z**	2,2	1,5	0,1	--	30000	0,011
	28	8	0,3	**6001**	5,1	2,4	0,1	24300	38000	0,02
	28	8	0,3	**6001-RS2**	5,1	2,4	0,1	--	17000	0,02
	28	8	0,3	**6001-2RS2**	5,1	2,4	0,1	--	17000	0,02
	28	8	0,3	**6001-Z**	5,1	2,4	0,1	--	26000	0,02
	28	8	0,3	**6001-2Z**	5,1	2,4	0,1	--	26000	0,02
	32	10	0,6	**6201**	6,8	3,1	0,1	22200	32000	0,04
	32	10	0,6	**6201-RS2**	6,8	3,1	0,1	--	16000	0,04
	32	10	0,6	**6201-2RS2**	6,8	3,1	0,1	--	16000	0,04
	32	10	0,6	**6201-Z**	6,8	3,1	0,1	--	24000	0,04

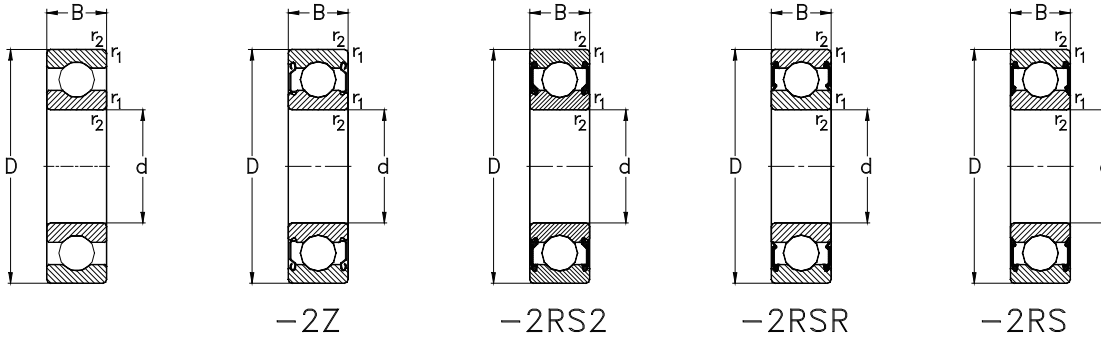

Hauptabmessungen [mm] *Boundary dimensions [mm]*				Lagertype *Designation*	Tragzahlen [kN] *Load ratings [kN]*			Referenzdrehzahlen [min^{-1}] *Thermal speed ratings [rpm]*	Grenzdrehzahlen [min^{-1}] *Limited speed ratings [rpm]*	Gewicht [kg] *Weight [kg]*
d	**D**	**B**	**r_1, r_2** min		**C_r** dyn.	**C_{0r}** stat.	**C_u**	**$n_{\theta r}$**	**n_G**	**m**
12	32	10	0,6	**6201-2Z**	6,8	3,1	0,1	--	24000	0,04
	37	12	1	**6301**	9,7	4,2	0,2	20000	28000	0,06
	37	12	1	**6301-RS2**	9,7	4,2	0,2	--	13000	0,06
	37	12	1	**6301-2RS2**	9,7	4,2	0,2	--	13000	0,06
	37	12	1	**6301-Z**	9,7	4,2	0,2	--	20000	0,06
	37	12	1	**6301-2Z**	9,7	4,2	0,2	--	20000	0,06
15	24	5	0,3	**61802**	2	1,3	0,1	19200	38000	0,007
	24	5	0,3	**61802-2RSR**	2	1,3	0,1	--	18500	0,007
	24	5	0,3	**61802-2Z**	2	1,3	0,1	--	28000	0,007
	28	7	0,3	**61902**	4,3	2,3	0,1	20600	34000	0,016
	28	7	0,3	**61902-2RSR**	4,3	2,3	0,1	--	16000	0,016
	28	7	0,3	**61902-2Z**	4,3	2,3	0,1	--	24000	0,016
	32	8	0,3	**16002**	5,6	2,8	0,1	20000	32000	0,03
	32	9	0,3	**6002**	5,6	2,8	0,1	21500	32000	0,029
	32	9	0,3	**6002-RS2**	5,6	2,8	0,1	--	15000	0,029
	32	9	0,3	**6002-2RS2**	5,6	2,8	0,1	--	15000	0,029
	32	9	0,3	**6002-Z**	5,6	2,8	0,1	--	24000	0,029
	32	9	0,3	**6002-2Z**	5,6	2,8	0,1	--	24000	0,029
	35	11	0,6	**6202**	7,6	3,7	0,2	20200	28000	0,043
	35	11	0,6	**6202-RS2**	7,6	3,7	0,2	--	13000	0,043
	35	11	0,6	**6202-2RS2**	7,6	3,7	0,2	--	13000	0,043
	35	11	0,6	**6202-Z**	7,6	3,7	0,2	--	20000	0,043

Anschlussmaße siehe Seite 383

Abutment and fillet dimensions see on page 383

Hauptabmessungen [mm] *Boundary dimensions [mm]*				Lagertype *Designation*	Tragzahlen [kN] *Load ratings [kN]*			Referenzdrehzahlen [min^{-1}] *Thermal speed ratings [rpm]*	Grenzdrehzahlen [min^{-1}] *Limited speed ratings [rpm]*	Gewicht [kg] *Weight [kg]*
d	**D**	**B**	**r_1, r_2** min		**C_r** dyn.	**C_{0r}** stat.	**C_u**	**$n_{\theta r}$**	**n_G**	**m**
15	35	11	0,6	**6202-2Z**	7,6	3,7	0,2	--	20000	0,043
	42	13	1	**6302**	11,4	5,4	0,2	17500	24000	0,08
	42	13	1	**6302-RS2**	11,4	5,4	0,2	--	12000	0,08
	42	13	1	**6302-2RS2**	11,4	5,4	0,2	--	12000	0,08
	42	13	1	**6302-Z**	11,4	5,4	0,2	--	18000	0,08
	42	13	1	**6302-2Z**	11,4	5,4	0,2	--	18000	0,08
17	26	5	0,3	**61803**	2,1	1,4	0,1	17100	34000	0,008
	26	5	0,3	**61803-2RSR**	2,1	1,4	0,1	--	16000	0,008
	26	5	0,3	**61803-2Z**	2,1	1,4	0,1	--	24000	0,008
	30	7	0,3	**61903**	4,6	2,6	0,1	18500	32000	0,018
	30	7	0,3	**61903-2RSR**	4,6	2,6	0,1	--	14500	0,018
	30	7	0,3	**61903-2Z**	4,6	2,6	0,1	--	22000	0,018
	35	8	0,3	**16003**	6	3,3	0,2	17700	28000	0,03
	35	10	0,3	**6003**	6	3,3	0,2	20300	28000	0,037
	35	10	0,3	**6003-RS2**	6	3,3	0,2	--	13000	0,037
	35	10	0,3	**6003-2RS2**	6	3,3	0,2	--	13000	0,037
	35	10	0,3	**6003-Z**	6	3,3	0,2	--	22000	0,037
	35	10	0,3	**6003-2Z**	6	3,3	0,2	--	22000	0,037
	40	12	0,6	**6203**	9,6	4,8	0,2	18100	24000	0,063
	40	12	0,6	**6203-RS2**	9,6	4,8	0,2	--	12000	0,063
	40	12	0,6	**6203-2RS2**	9,6	4,8	0,2	--	12000	0,063
	40	12	0,6	**6203-Z**	9,6	4,8	0,2	--	18000	0,063

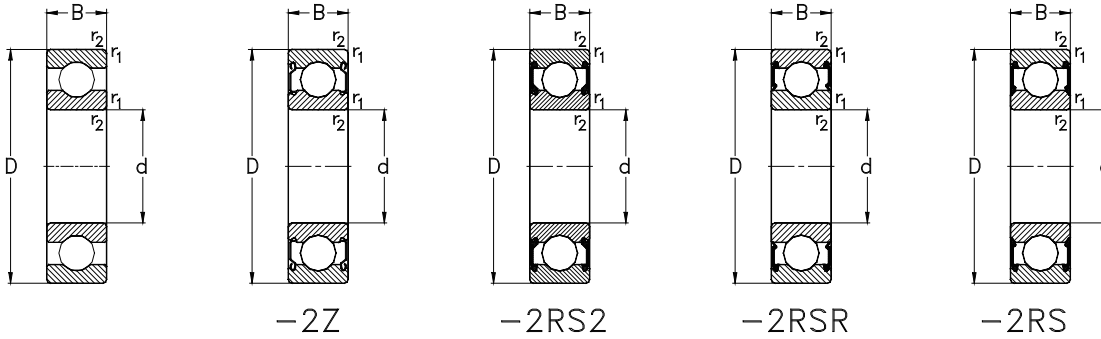

Hauptabmessungen [mm] *Boundary dimensions [mm]*				Lagertype *Designation*	Tragzahlen [kN] *Load ratings [kN]*			Referenzdrehzahlen [min^{-1}] *Thermal speed ratings [rpm]*	Grenzdrehzahlen [min^{-1}] *Limited speed ratings [rpm]*	Gewicht [kg] *Weight [kg]*
d	**D**	**B**	**r_1, r_2** min		**C_r** dyn.	**C_{0r}** stat.	**C_u**	**$n_{\theta r}$**	**n_G**	**m**
17	40	12	0,6	**6203-2Z**	9,6	4,8	0,2	--	18000	0,063
	47	14	1	**6303**	13,6	6,6	0,3	15900	22000	0,11
	47	14	1	**6303-RS2**	13,6	6,6	0,3	--	10500	0,11
	47	14	1	**6303-2RS2**	13,6	6,6	0,3	--	10500	0,11
	47	14	1	**6303-Z**	13,6	6,6	0,3	--	16000	0,11
	47	14	1	**6303-2Z**	13,6	6,6	0,3	--	16000	0,11
	62	17	1,1	**6403**	22,7	10,8	0,5	13700	18000	0,275
20	32	7	0,3	**61804**	3,5	2,2	0,1	16600	28000	0,018
	32	7	0,3	**61804-2RSR**	3,5	2,2	0,1	--	12500	0,018
	32	7	0,3	**61804-2Z**	3,5	2,2	0,1	--	19000	0,018
	37	9	0,3	**61904**	6,4	3,7	0,2	17000	26000	0,038
	37	9	0,3	**61904-2RSR**	6,4	3,7	0,2	--	12000	0,038
	37	9	0,3	**61904-2Z**	6,4	3,7	0,2	--	18000	0,038
	42	8	0,3	**16004**	7,9	4,5	0,2	14300	24000	0,049
	42	12	0,6	**6004**	9,4	5	0,2	18300	24000	0,065
	42	12	0,6	**6004-RS2**	9,4	5	0,2	--	11000	0,065
	42	12	0,6	**6004-2RS2**	9,4	5	0,2	--	11000	0,065
	42	12	0,6	**6004-Z**	9,4	5	0,2	--	17000	0,065
	42	12	0,6	**6004-2Z**	9,4	5	0,2	--	17000	0,065
	47	14	1	**6204**	12,8	6,7	0,3	16300	20000	0,105
	47	14	1	**6204-RS2**	12,8	6,7	0,3	--	9900	0,105
	47	14	1	**6204-2RS2**	12,8	6,7	0,3	--	9900	0,105

Anschlussmaße siehe Seite 383

Abutment and fillet dimensions see on page 383

Hauptabmessungen [mm] *Boundary dimensions [mm]*				Lagertype *Designation*	Tragzahlen [kN] *Load ratings [kN]*			Referenzdrehzahlen [min^{-1}] *Thermal speed ratings [rpm]*	Grenzdrehzahlen [min^{-1}] *Limited speed ratings [rpm]*	Gewicht [kg] *Weight [kg]*
d	**D**	**B**	**r_1, r_2** min		**C_r** dyn.	**C_{0r}** stat.	**C_u**	**$n_{\theta r}$**	**n_G**	**m**
20	47	14	1	**6204-Z**	12,8	6,7	0,3	--	15000	0,105
	47	14	1	**6204-2Z**	12,8	6,7	0,3	--	15000	0,105
	52	15	1,1	**6304**	15,9	7,9	0,4	14400	19000	0,148
	52	15	1,1	**6304-RS2**	15,9	7,9	0,4	--	9300	0,148
	52	15	1,1	**6304-2RS2**	15,9	7,9	0,4	--	9300	0,148
	52	15	1,1	**6304-Z**	15,9	7,9	0,4	--	14000	0,148
	52	15	1,1	**6304-2Z**	15,9	7,9	0,4	--	14000	0,148
	72	19	1,1	**6404**	31	15,3	0,7	12200	15000	0,412
22	50	14	1	**62/22**	14	7,7	0,4	14900	19000	0,11
	50	14	1	**62/22-2RS2**	14	7,7	0,4	--	11500	0,11
	50	14	1	**62/22-2Z**	14	7,7	0,4	--	15000	0,11
	56	16	1,1	**63/22**	18,4	9,3	0,4	13500	18000	0,16
	56	16	1,1	**63/22-2RS2**	18,4	9,3	0,4	--	9500	0,16
	56	16	1,1	**63/22-2Z**	18,4	9,3	0,4	--	14000	0,16
25	37	7	0,3	**61805**	3,7	2,6	0,1	13500	24000	0,022
	37	7	0,3	**61805-2RSR**	3,7	2,6	0,1	--	11000	0,022
	37	7	0,3	**61805-2Z**	3,7	2,6	0,1	--	17000	0,022
	42	9	0,3	**61905**	6,7	4,2	0,2	14100	22000	0,045
	42	9	0,3	**61905-2RSR**	6,6	4,2	0,2	--	10500	0,045
	42	9	0,3	**61905-2Z**	6,7	4,2	0,2	--	16000	0,045
	47	8	0,3	**16005**	7,2	4,7	0,3	11900	20000	0,056
	47	12	0,6	**6005**	10,0	5,8	0,3	15300	20000	0,078

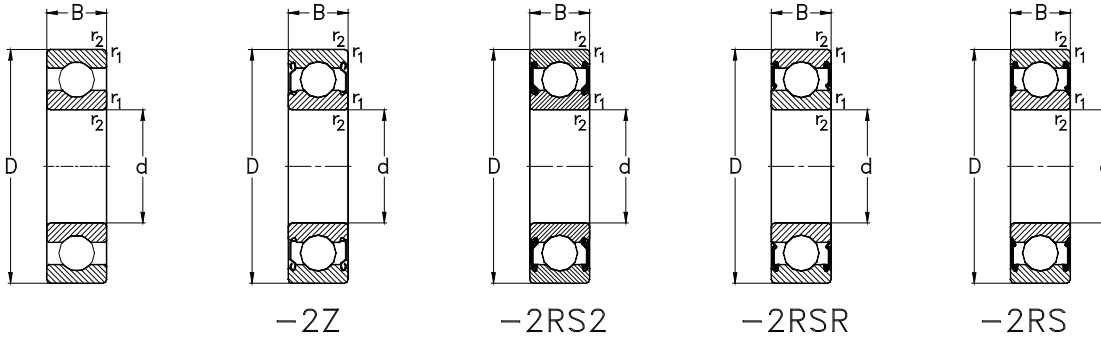

Hauptabmessungen [mm] *Boundary dimensions [mm]*				Lagertype *Designation*	Tragzahlen [kN] *Load ratings [kN]*			Referenzdrehzahlen [min^{-1}] *Thermal speed ratings [rpm]*	Grenzdrehzahlen [min^{-1}] *Limited speed ratings [rpm]*	Gewicht [kg] *Weight [kg]*
d	**D**	**B**	**r_1, r_2** min		**C_r** dyn.	**C_{0r}** stat.	**C_u**	**$n_{\theta r}$**	**n_G**	**m**
25	47	12	0,6	**6005-RS2**	10,1	5,9	0,3	--	10000	0,078
	47	12	0,6	**6005-2RS2**	10,1	5,9	0,3	--	10000	0,078
	47	12	0,6	**6005-Z**	10,1	5,9	0,3	--	15000	0,078
	47	12	0,6	**6005-2Z**	10,1	5,9	0,3	--	15000	0,078
	52	15	1	**6205**	14	7,9	0,4	14400	18000	0,125
	52	15	1	**6205-RS2**	14	7,9	0,4	--	9300	0,125
	52	15	1	**6205-2RS2**	14	7,9	0,4	--	9300	0,125
	52	15	1	**6205-Z**	14	7,9	0,4	--	14000	0,125
	52	15	1	**6205-2Z**	14	7,9	0,4	--	14000	0,125
	62	17	1,1	**6305**	22,4	11,5	0,5	12300	16000	0,232
	62	17	1,1	**6305-RS2**	22,4	11,5	0,5	--	7300	0,232
	62	17	1,1	**6305-2RS2**	22,4	11,5	0,5	--	7300	0,232
	62	17	1,1	**6305-Z**	22,4	11,5	0,5	--	11000	0,232
	62	17	1,1	**6305-2Z**	22,4	11,5	0,5	--	11000	0,232
	80	21	1,5	**6405**	38,3	19,3	0,9	11000	13000	0,543
28	58	16	1	**62/28**	16,6	9,4	0,4	13100	16000	0,17
	58	16	1	**62/28-2RS2**	16,6	9,4	0,4	--	9500	0,17
	58	16	1	**62/28-2Z**	16,6	9,4	0,4	--	14000	0,17
	68	18	1,1	**63/28**	25	13,8	0,6	11300	14000	0,29
	68	18	1,1	**63/28-2RS2**	25	13,8	0,6	--	6000	0,29
	68	18	1,1	**63/28-2Z**	25	13,8	0,6	--	9000	0,29
30	42	7	0,3	**61806**	4	3,2	0,1	11300	20000	0,027

Anschlussmaße siehe Seite 383

Abutment and fillet dimensions see on page 383

Hauptabmessungen [mm] *Boundary dimensions [mm]*				Lagertype *Designation*	Tragzahlen [kN] *Load ratings [kN]*			Referenzdrehzahlen [min^{-1}] *Thermal speed ratings [rpm]*	Grenzdrehzahlen [min^{-1}] *Limited speed ratings [rpm]*	Gewicht [kg] *Weight [kg]*
d	**D**	**B**	**r_1, r_2** min		**C_r** dyn.	**C_{0r}** stat.	**C_u**	**$n_{\theta r}$**	**n_G**	**m**
30	42	7	0,3	**61806-2RSR**	4	3,2	0,1	--	10000	0,027
	42	7	0,3	**61806-2Z**	4	3,2	0,1	--	15000	0,027
	47	9	0,3	**61906**	7,2	5	0,2	11900	19000	0,051
	47	9	0,3	**61906-2RSR**	7,2	5	0,2	--	9500	0,051
	47	9	0,3	**61906-2Z**	7,2	5	0,2	--	14000	0,051
	55	9	0,3	**16006**	11,2	7,4	0,3	10500	17000	0,084
	55	13	1	**6006**	13,2	8,3	0,4	13100	17000	0,115
	55	13	1	**6006-RS2**	13,2	8,3	0,4	--	8500	0,115
	55	13	1	**6006-2RS2**	13,2	8,3	0,4	--	8500	0,115
	55	13	1	**6006-Z**	13,2	8,3	0,4	--	13000	0,115
	55	13	1	**6006-2Z**	13,2	8,3	0,4	--	13000	0,115
	62	16	1	**6206**	19,5	11,3	0,5	12000	15000	0,192
	62	16	1	**6206-RS2**	19,5	11,3	0,5	--	7300	0,192
	62	16	1	**6206-2RS2**	19,5	11,3	0,5	--	7300	0,192
	62	16	1	**6206-Z**	19,5	11,3	0,5	--	11000	0,192
	62	16	1	**6206-2Z**	19,5	11,3	0,5	--	11000	0,192
	72	19	1,1	**6306**	27	15,2	0,7	10800	13000	0,348
	72	19	1,1	**6306-RS2**	27	15,2	0,7	--	6300	0,348
	72	19	1,1	**6306-2RS2**	27	15,2	0,7	--	6300	0,348
	72	19	1,1	**6306-Z**	27	15,2	0,7	--	9500	0,348
	72	19	1,1	**6306-2Z**	27	15,2	0,7	--	9500	0,348
	90	23	1,5	**6406**	47,4	24,5	1,1	9900	11000	0,746

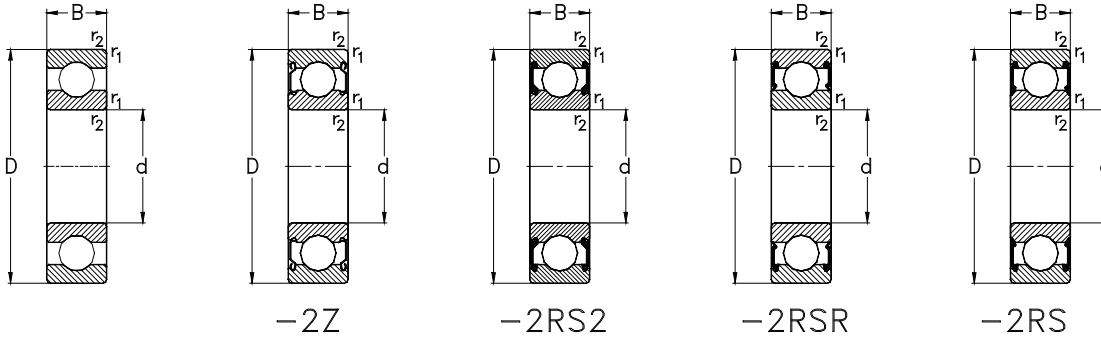

Hauptabmessungen [mm]				Lagertype	Tragzahlen [kN]			Referenzdrehzahlen [min^{-1}]	Grenzdrehzahlen [min^{-1}]	Gewicht [kg]
Boundary dimensions [mm]				*Designation*	*Load ratings [kN]*			*Thermal speed ratings [rpm]*	*Limited speed ratings [rpm]*	*Weight [kg]*
d	**D**	**B**	**r_1, r_2** min		**C_r** dyn.	**C_{0r}** stat.	**C_u**	**$n_{\theta r}$**	**n_G**	**m**
35	47	7	0,3	**61807**	4,3	3,6	0,2	9600	18000	0,03
	47	7	0,3	**61807-2RSR**	4,3	3,6	0,2	--	8500	0,03
	47	7	0,3	**61807-2Z**	4,3	3,6	0,2	--	13000	0,03
	55	10	0,6	**61907**	10,4	7,2	0,3	10500	16000	0,08
	55	10	0,6	**61907-2RSR**	10,4	7,2	0,3	--	7500	0,08
	55	10	0,6	**61907-2Z**	10,4	7,2	0,3	--	11000	0,08
	62	9	0,3	**16007**	12,2	8,8	0,4	8900	15000	0,107
	62	14	1	**6007**	16,2	10,4	0,5	11600	15000	0,151
	62	14	1	**6007-RS2**	16,2	10,4	0,5	--	7300	0,151
	62	14	1	**6007-2RS2**	16,2	10,4	0,5	--	7300	0,151
	62	14	1	**6007-Z**	16,2	10,4	0,5	--	11000	0,151
	62	14	1	**6007-2Z**	16,2	10,4	0,5	--	11000	0,151
	72	17	1,1	**6207**	25,7	15,3	0,7	10300	13000	0,288
	72	17	1,1	**6207-RS2**	25,7	15,3	0,7	--	6300	0,288
	72	17	1,1	**6207-2RS2**	25,7	15,3	0,7	--	6300	0,288
	72	17	1,1	**6207-Z**	25,7	15,3	0,7	--	9500	0,288
	72	17	1,1	**6207-2Z**	25,7	15,3	0,7	--	9500	0,288
	80	21	1,5	**6307**	33,4	19,2	0,9	9900	12000	0,458
	80	21	1,5	**6307-RS2**	33,4	19,2	0,9	--	5600	0,458
	80	21	1,5	**6307-2RS2**	33,4	19,2	0,9	--	5600	0,458
	80	21	1,5	**6307-Z**	33,4	19,2	0,9	--	8500	0,458
	80	21	1,5	**6307-2Z**	33,4	19,2	0,9	--	8500	0,458

Anschlussmaße siehe Seite 383

Abutment and fillet dimensions see on page 383

Hauptabmessungen [mm] *Boundary dimensions [mm]*				Lagertype *Designation*	Tragzahlen [kN] *Load ratings [kN]*			Referenzdrehzahlen [min^{-1}] *Thermal speed ratings [rpm]*	Grenzdrehzahlen [min^{-1}] *Limited speed ratings [rpm]*	Gewicht [kg] *Weight [kg]*
d	**D**	**B**	**r_1, r_2** min		**C_r** dyn.	**C_{0r}** stat.	**C_u**	**$n_{\theta r}$**	**n_G**	**m**
35	100	25	1,5	**6407**	57	30,1	1,4	9000	10000	0,928
40	52	7	0,3	**61808**	4,4	3,9	0,2	8400	16000	0,034
	52	7	0,3	**61808-2RSR**	4,4	3,9	0,2	--	7000	0,034
	52	7	0,3	**61808-2Z**	4,4	3,9	0,2	--	11000	0,034
	62	12	0,6	**61908**	12,2	8,9	0,4	10100	14000	0,12
	62	12	0,6	**61908-2RSR**	12,2	8,9	0,4	--	6500	0,12
	62	12	0,6	**61908-2Z**	12,2	8,9	0,4	--	10000	0,12
	68	9	0,3	**16008**	12,6	9,7	0,4	7900	14000	0,126
	68	15	1	**6008**	17	11,7	0,5	10700	14000	0,188
	68	15	1	**6008-RS2**	17	11,7	0,5	--	6600	0,188
	68	15	1	**6008-2RS2**	17	11,7	0,5	--	6600	0,188
	68	15	1	**6008-Z**	17	11,7	0,5	--	10000	0,188
	68	15	1	**6008-2Z**	17	11,7	0,5	--	10000	0,188
	80	18	1,1	**6208**	29,5	18,2	0,8	9300	11000	0,366
	80	18	1,1	**6208-RS2**	29,5	18,2	0,8	--	5600	0,366
	80	18	1,1	**6208-2RS2**	29,5	18,2	0,8	--	5600	0,366
	80	18	1,1	**6208-Z**	29,5	18,2	0,8	--	8500	0,366
	80	18	1,1	**6208-2Z**	29,5	18,2	0,8	--	8500	0,366
	90	23	1,5	**6308**	40,8	24	1,1	9000	11000	0,632
	90	23	1,5	**6308-RS2**	40,8	24	1,1	--	5000	0,632
	90	23	1,5	**6308-2RS2**	40,8	24	1,1	--	5000	0,632
	90	23	1,5	**6308-Z**	40,8	24	1,1	--	7500	0,632